VALHALLA SCIENTIFIC, INC.

4314 SERIES
DIGITAL IGNITER TESTER
OPERATION MANUAL

VALHALLA
SCIENTIFIC

9955 Mesa Rim Road
San Diego, CA 92121
(619) 457-5576
(619) 457-0127 Fax

CERTIFICATION

Valhalla Scientific, Inc. certifies that this instrument was thoroughly tested and inspected and found to meet published specifications when shipped from the factory. Valhalla Scientific, Inc. further certifies that its calibration measurements are traceable to the National Institute of Standards and Technology to the extent allowed by NIST's calibration facility.

WARRANTY

The warranty period for this instrument is stated on your invoice and packing list. Please refer to these to determine appropriate warranty dates. We will repair or replace the instrument during the warranty period provided it is returned to Valhalla Scientific, Inc. freight prepaid. No other warranty is expressed or implied. We are not liable for consequential damages. Permission and a return authorization number must be obtained directly from the factory for warranty repairs. No liability will be accepted if returned without such permission.

LAST ONE!

Customer gets a copy

Return this to the floor

LAST ONE!

TABLE OF CONTENTS

SECTION I: GENERAL INFORMATION 1

1-1 Description
1-2 Fail-Safe Operation
1-3 Accessories
1-4 Optional Equipment

Table 1-1. Optional Equipment Items

SECTION II: SPECIFICATIONS 2

2-1 Ranges and Test Currents
2-2 Performance and Physical Specifications

SECTION III: INSTALLATION 3

3-1 Introduction
3-2 Initial Inspection
3-3 Power Requirements
3-4 Battery Pack Charging
3-5 Installation
3-6 BCD-MX Connections

Table 3-2. BCD-MX Connector Pin Assignments

SECTION IV: OPERATION 4

4-1 Introduction
4-2 Front Panel
4-3 Ranges
4-4 Igniter Resistance Movements

SECTION V: THEORY OF OPERATION 5

5-1 Introduction
5-2 Circuit Description
5-3 A/D Converter
5-4 Reference Amplifier
5-5 Ohms-To-DC Converter
5-6 Constant Current Source

TABLE OF CONTENTS

5-7 Transconductance Amplifier Operation
5-8 Fail-Safe Design
5-9 LED Display

Figure 5-1. Block Diagram of Digital Igniter Tester
Figure 5-2. Timing Diagram for A/D Converter
Figure 5-3. Simplified Diagram, Transconductance Amplifier

SECTION VI: MAINTENANCE 9

6-1 Introduction
6-2 Required Test Equipment
6-3 Calibration Procedure
6-3-1 Zero Calibration
6-3-2 Range Calibration
6-4 Troubleshooting
6-4-1 Power Supplies
6-4-2 LED Display
6-4-3 A/D Converter-Ohms Converter

Figure 6-1. Logic Gate Functions
Figure 6-2. LED Pin Numbers
Figure 6-3. Alpha Characters Displayed Under Some Malfunction Conditions

APPENDIX I: PARTS LISTS

APPENDIX II: SCHEMATICS

SECTION I GENERAL INFORMATION

1-1. Description

The Valhalla Scientific Series 4314 Digital Igniter Testers are available with various input range combinations. Otherwise, all Model 4314's are identical. Subsequent discussion applies to all Model 4314's unless specific exceptions are noted.

The Valhalla Scientific Model 4314 Digital Igniter Tester is designed specifically to test the igniters used to detonate charges in explosive bolts and similar remote release devices. This tester was designed with one major objective: to make it absolutely fail-safe.

1-2. Fail-Safe Operation

The Model 4314 Digital Igniter Tester incorporates internal protective circuits which render it incapable of delivering excessive voltage or current to the igniter under test. A detailed description of the fail-safe circuits is contained in paragraphs 5-6 and 5-8. The meter was pretested at the factory where component failure was simulated to duplicate a failed mode. The resulting fail-safe current levels were recorded and supplied as part of the original calibration information. As a further precaution, the possibility of an external common-mode voltage delivering unwanted power to the igniter is eliminated by operating the Model 4314 from an internal battery pack. Thus, it is totally isolated from the AC power line. An external line-powered charger is included with the Model 4314 for recharging the battery pack.

1-3. Accessories

The Valhalla Scientific Model 4314 is shipped from the factory with a rechargeable nickel cadmium battery pack, external charger and instruction manual. Although batteries are shipped from the factory fully charged, some recharging might be necessary to insure a fully charged condition.

1-4. Optional Equipment

There are several optional equipment items available for the Series 4314 Digital Igniter Testers which are listed in Table 1-1.

Table 1-1 Optional Equipment Items

Options:

"A"	Battery Charger/Eliminator
"BCD-MX"	Data Outputs
"CC4"	Meter and Accessory Carrying Case
"HDB"	Spare Battery Pack
"JAWS"	Heavy Duty Kelvin Clips
"KCS"	Kelvin Clip Set
"K"	Kelvin Clip Cable Set (with KCS)
"KK"	Kelvin Cable Set (with JAWS)
"MP-1"	Kelvin Micro Probes
"MP-2"	Kelvin Mini Probes
"MP-3"	4-Wire with Amphenol Connectors
"MP-4"	4-Wire Surface Probes
"MP-5"	4-Wire Surface Probes
Option "R4"	Rack Mount Adapter

SECTION II SPECIFICATIONS

2-1. Ranges and Test Currents:

4314A Ranges	20Ω	200Ω	2KΩ	20KΩ			
4314B Ranges		200Ω	2KΩ	20KΩ			
4314AN Ranges		20Ω	200Ω			2MΩ	20MΩ
4314BN Ranges			200Ω		200KΩ		
Resolution	1mΩ	10mΩ	100mΩ	1Ω	10Ω	100Ω	1KΩ
Test Current	10mA	1mA	100μA	10μA	1μA	100nA	10nA
Fail Safe		15mA	1.5mA	150μA	15μA	5μA	5μA

4314UK Ranges		20Ω	200Ω	2KΩ	20KΩ
4314KB Ranges		20Ω	200Ω	2KΩ	20KΩ
Resolution	1mΩ	10mΩ	100mΩ	1Ω	
Test Current	5mA	500mA	50μA	5μA	
Fail Safe		8mA	1.5mA	150μA	20μA

2-2. Specifications

Accuracy: (180 days, 25°C ± 10°C)

±0.02% of reading ± 0.02% of range for the 20 ohms, 200 ohms, 2K ohms and 200 K ohms ranges; ±1.0 of reading ±0.2% of range for the 2M ohm range; ±2.0% of reading ±0.2% of range for the 20M ohm range.

Display: 4½ digit (19999) LED

Terminal Configuration: Four-wire Kelvin

Overload Indication: Display Flashes

Maximum Input: 250 VDC or Peak AC without damage

Operating Temperature Range: 0°C to 50°C

Temperature Coefficient: ±0.002%/°C (from 0°C to 15°C and 35°C to 50°C); T. C. applies to ranges up to 200K ohms

Conversion Rate: Approximately 300 milliseconds

Power: Rechargeable Nickel-Cadmium batteries and charger

Size: 235 mm/9" L x 216 mm/8.5" W x 64 mm/2.5" H

Weight: 1.6 kG/3.5 lbs. net; 3 kG/6.5 lbs. shipping

2-3. 4314UK and 4314KB Specifications

Accuracy: 0.02% of reading + 0.03% of range

On the 4314KB the charging jack is mounted on the front panel.

R24 changes to 4.75K ohm, Valhalla stock #1-10142

R900 added between the anode of CR9 and the junction of R76 and R114. The value is 100 ohm, Valhalla stock #1-01021.

R901 added across R68. The value is 10K ohm, Valhalla stock #1-10037:

All remaining parts are those of the 4314A.

SECTION III INSTALLATION

3-1. Introduction

This section outlines the procedures for inspecting and installing Valhalla Scientific Series 4314 Digital Igniter Testers.

3-2. Initial Inspection

Before accepting the instrument from the shipper, inspect the shipping container for signs of external damage. If any damage is noted advise the carrier immediately.

Unpack the instrument and keep the shipping container until the instrument has been inspected for shipping damage. If damage is evident, contact the carrier and Valhalla Scientific for authorization to return the instrument to Valhalla Scientific for repairs.

If the container is damaged, but the instrument appears to be intact, perform the calibration procedure outlined in Section V to be sure that the instrument has incurred no hidden damage.

3-3. Power Requirements

The Valhalla Scientific Model 4314 is supplied with a self-contained rechargeable nickel cadmium battery pack and an external charger. Although the battery pack is charged prior to shipment it is desirable to refresh the charge before using the instrument.

3-4. Battery Pack Charging

To refresh the battery pack before initial use, connect the AC power input of the charger to a 115-volt AC power outlet. Charge for eight to sixteen hours.

The normal operating time between battery pack and recharge is eight hours of continuous duty. It is recommended that the Model 4314 battery pack be recharged overnight when not in use to insure that it is ready when needed. Sixteen hours of recharge time is required after eight hours of continuous use.

3-5. Installation

The Model 4314 draws little power and generates virtually no heat. Consequently, it will function properly in any area where the ambient temperature does not exceed its specified temperature range.

3-6. BCD-MX Connections

The BCD-MX Option provides BCD output for operation of external monitoring equipment. An instrument equipped with this option has a rear-panel mounted connector with pin assignments as listed in Table 2-1. All outputs are positive, active high logic capable of driving one TTL load. The BCD data is valid when the STROBE signal is high.

Table 2-1.
BCD-MX Connector Pin Assignments

Pin Nos.	Function
1, 6, 11, 16	1 BIT
2, 7, 12, 17	2 BIT
3, 8, 13, 18	4 BIT
4, 9, 14, 19	8 BIT
21	10,000 Count
22, 23, 24, 50	GND
29	10^0 Strobe
30	10^1 Strobe
31	10^2 Strobe
32	10^3 Strobe
5, 26, 33	+5V

SECTION IV OPERATION

4-1. Introduction

This section of the manual contains complete operating instructions for the Series 4314 Digital Igniter Testers. Included is a description of the front panel controls and their functions.

4-2. Front Panel

When the front panel power switch is placed in the OFF/CHARGE position, all power is removed from the output terminals, and the battery pack is connected to the charging circuit. When the switch is placed in the ON position, the battery pack is disconnected from the charging circuit. The possibility of a common mode voltage between the igniter and AC Power Ground is, therefore, eliminated. The operator need not be concerned if the AC Power Charging Adapter is plugged in while measuring igniter resistance.

4-3. Ranges

The Model 4314 input range is selected by depressing the desired button on a multi-station interlocking pushbutton array located on the right-hand side of the front panel. The pushbutton for the lowest range is nearest to the POWER switch.

4-4. Igniter Resistance Measurements

With the charger disconnected and the input cable connected to the Model 4314, connect the Kelvin clips to the igniter. Depress the desired RANGE switch pushbutton. Turn POWER switch to on. Observe the reading on the digital display. A blinking display indicates the resistance to be measured exceeds the full scale range selected. Select a higher range if this occurs.

SECTION V THEORY OF OPERATION

5-1. Introduction

The Valhalla Scientific Model 4314 Digital Igniter Tester is shown in block diagram form in Figure 5-1. It consists of an analog-to-digital (A/D) converter and an ohms-to-DC converter. It outputs a DC voltage precisely proportional to the igniter resistance. This precise DC voltage is converted from analog to digital form by the A/D converter and displayed as a resistance value.

The Model 4314 uses solid-state semiconductors exclusively, and C-MOS circuits extensively, the latter minimizing power requirements and making battery pack operation practical.

5-2. Circuit Description

The circuit descriptions which follow are referenced to the block diagram of Figure 5-1 and schematic diagram 4314-070.

5-3. A/D Converter

The Model 4314 incorporates a three-step integrator to convert the ohms-to-DC converter output from analog to digital form (see Figure 5-1). The initial step, or RESTORE mode, lasts for 200 milliseconds. During this period the input to preamplifier IC12 is grounded through one section of quad-bilateral switch IC2. Sample-and-Hold switch Q15 is ON, closing the feedback loop around the integrator IC13 and zero detector IC14. This forces the zero detector output to zero, and capacitor C21 charges to the level of any offset voltage present in the preamplifier, integrator and zero detector. This charge on C21 will cancel the effect of any zero drift or offset originating in the analog section of the A/D converter during the period when the ohms-to-DC converter output is being integrated.

With the capacitor C21 charged to offset any zero error present, the second step of the digitizing process begins. Q15 is switched OFF, opening the feedback loop, and the ohms-to-DC converter output is applied to the input of unity gain amplifier IC12. The output of this preamplifier is applied to the integrator input. During the 100-millisecond integration time, the integrator output rises to a level proportional to the amplitude of the input voltage. The output of the zero detector, which senses the integrator output, delivers a control voltage to the "D" input of IC6 at terminal 5.

At the end of the integration period, the input of IC12 is disconnected from the ohms-to-DC converter output, and the control signal at IC6-5 is clocked through the flip-flop to its "Q" output at IC6-1. This connects the reference voltage (E_{ref}) to the input of IC12. The polarity of E_{ref} is opposite to that of the ohms-to-DC converter output.

With E_{ref} applied to preamplifier IC12, the input to the integrator, previously charged to the ohms-to-DC converter output value, begins to charge in the opposite direction toward the negative value of E_{ref}. Time T_x (Step 3) of Figure 5-2 is the time required for the integrator voltage to decrease to zero volts, and is directly proportional to E_x; that is: $E_x/E_{ref} = T_x/100$ milliseconds. Consequently, the value of E_x can be determined by measuring T_x.

The actual digitizing process is performed by IC7 counting the output of the crystal-controlled clock during Step 3. When the zero detector output passes through zero, due to E_{ref} integration, the count initiated at the beginning of Step 3 is stopped, and the total is displayed on the LED readout. At the same time, the zero detector sets the monostable comprising IC5-8, -9, -10, -11, -12, and -13, returning the A/D converter to the RESTORE mode (Step 1).

5-4. Reference Amplifier

The precision reference voltage required to perform Step 3 of the A/D conversion is developed in IC15-1, -2 and -3. Current for the reference zener CR17 is derived from constant current source Q9. The zener voltage is sensed at IC15-3, and feedback from IC15-1 to IC15-2 sets the output at IC15-1 to approximately -1.05 volts. This voltage is applied to quad-bilateral switch IC2-1 and, during Step 3, to the voltage divider consisting of R21 through R24. Quad-bilateral switch IC3 connects -1 volt to the input of preamplifier IC12 from the arm of R23.

5-5. Ohms-To-DC Converter

The ohms-to-DC converter generates a constant current which is passed through the igniter under test to develop the voltage measured by the A/D converter.

5-6. Constant Current Source

The constant current source comprises two sections of IC15, IC17, Q8, DS6 and associated components. The input to the constant current source is approximately +1.05 volts, developed at IC15-1 and coupled to IC15-13 through R58 and R59.

The heart of the constant current source, and the major factor that makes the Model 4314 absolutely fail-safe, is the voltage-to-current converter, which incorporates a transconductance amplifier (U.S. Patent No. 4,091,333). A simplified schematic of this unique circuit is shown in Figure 5-3. The amplifier, IC15-12, -13 and -14 is an invertor, and its output is applied to IC15-9. The amplifier comprised of IC15-8, -9, and -10 has unity gain due to the feedback through R74. Its output is applied to the inverting input at IC17-3. The output of IC17-6 provides feedbacks to the non-inverting input at IC15-10. This circuit operates to maintain the inverting input at IC17-3 and the non-inverting input at IC17-2 at the same potential.

5-7. Transconductance Amplifier Operation

Assume that terminals I_{hi} and I_{lo} of Figure 5-3 are shorted, and 1 volt is applied to the transconductance amplifier so that I_{hi} is positive. To equalize the inputs at IC17-2 and IC17-3, IC15-8 must be driven to zero. This condition occurs only when the voltage drops across R73 and R77 are equal to the drops across R74 and R76. For these voltage drops to be equal, the output at IC17-8 must be at +1 volt. Since the output at IC15-8 must be zero, the drop across the R74 is 0.5 volt, making the inverting input 0.5 volt. The drop across R73, R76 and R77 will also be 0.5 volt. Since the inputs to IC15 are essentially equal its output is zero (offset by the few microvolts required to drive IC17-6 to +1 volt). Under these conditions the sum of the voltages across R73, R74, R76 and R77 equals the sum of E_{in} and E_{out} at IC17-6, and the input at IC17-2 is zero.

Consider now that the short is removed from the I_{hi} and I_{lo} terminals and a 100-ohm resistor (R1) is connected in its place. The current through R1 increases the voltage at IC15-10. A balanced condition will be reached when the output at IC15-8 is equal to the non-inverting inputs at IC17-2. Again, this condition occurs when the drops across R73 and R77 are equal to the drops

across R74 and R76. At this time the output at IC17-6 is 1.1 volts. The drop across the Range resistor is 1 volt, just as it was when the output terminals were shorted, and the current through R1 is 10 milliamperes, just as it was through the jumper when the output terminals were shorted.

5-8. Fail-Safe Design

Reference to the Model 4314 schematic will show that the output of IC17-6 is actually applied to the base of transistor Q8, which acts as a current limiter. The worst-case failure that could occur in this circuit would be a Q8 short, which would effectively connect the -5 volt supply directly across R49, CR9, the range resistor and R1. DS6, however, acts as a 1.6 volt zener diode, limiting the voltage that can appear across these components. Even if every component in the amplifier circuit shorted, the current through the igniter could not exceed safe limits, because the -5 volt supply includes inherent limiting. Because of the design of T1, the -5 volt supply can only deliver 20 to 25 milliamperes before the DC/DC converter disengages, dropping the -5 volt output to zero.

5-9. LED Display

At the completion of the A/D conversion, the count is stored in four registers of IC7. IC7 also contains an internal oscillator which is set by C4 to operate at 10 kHz. IC7 output terminals 1, 2, 23, and 24 are connected to decoder-driver IC10. These outputs are sequentially connected to the IC7 storage registers at a 10 kHz rate. Concurrently, driver transistors Q2 through Q5 are turned on in sequence. When data representing the most significant digit is connected to IC7's output, Q5 is turned on and the decoded data appears on DS2. Data for each less significant digit appears sequentially at IC7's output as the corresponding driver transistors (Q4 through Q2) are turned on, and is displayed by DS3, DS4 and DS5. This sequence is repeated at the 10 kHz rate, and the data display consequently appears to be continuous.

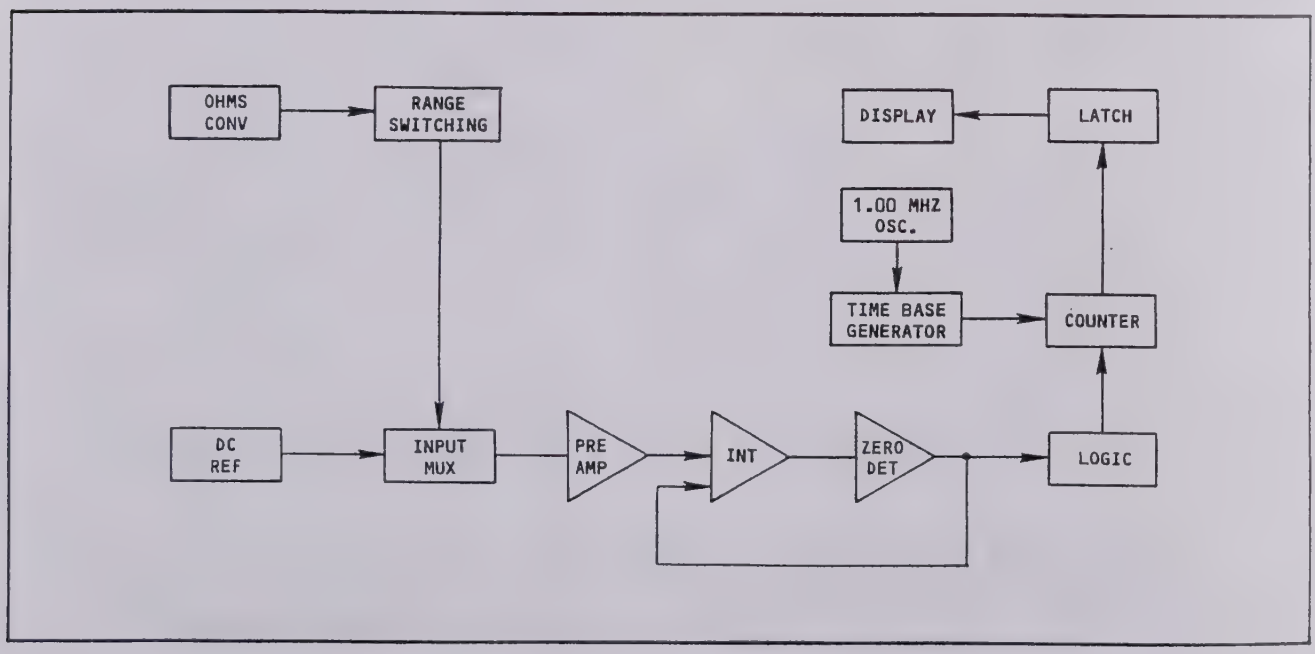

Figure 5-1. Block Diagram of Digital Igniter Tester

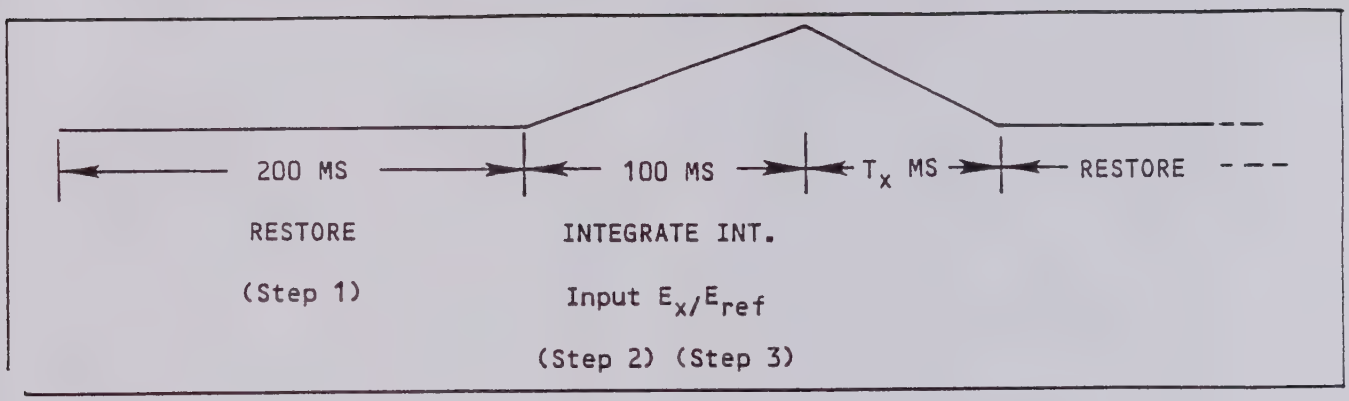

Figure 5-2. Timing Diagram for A/D Converter

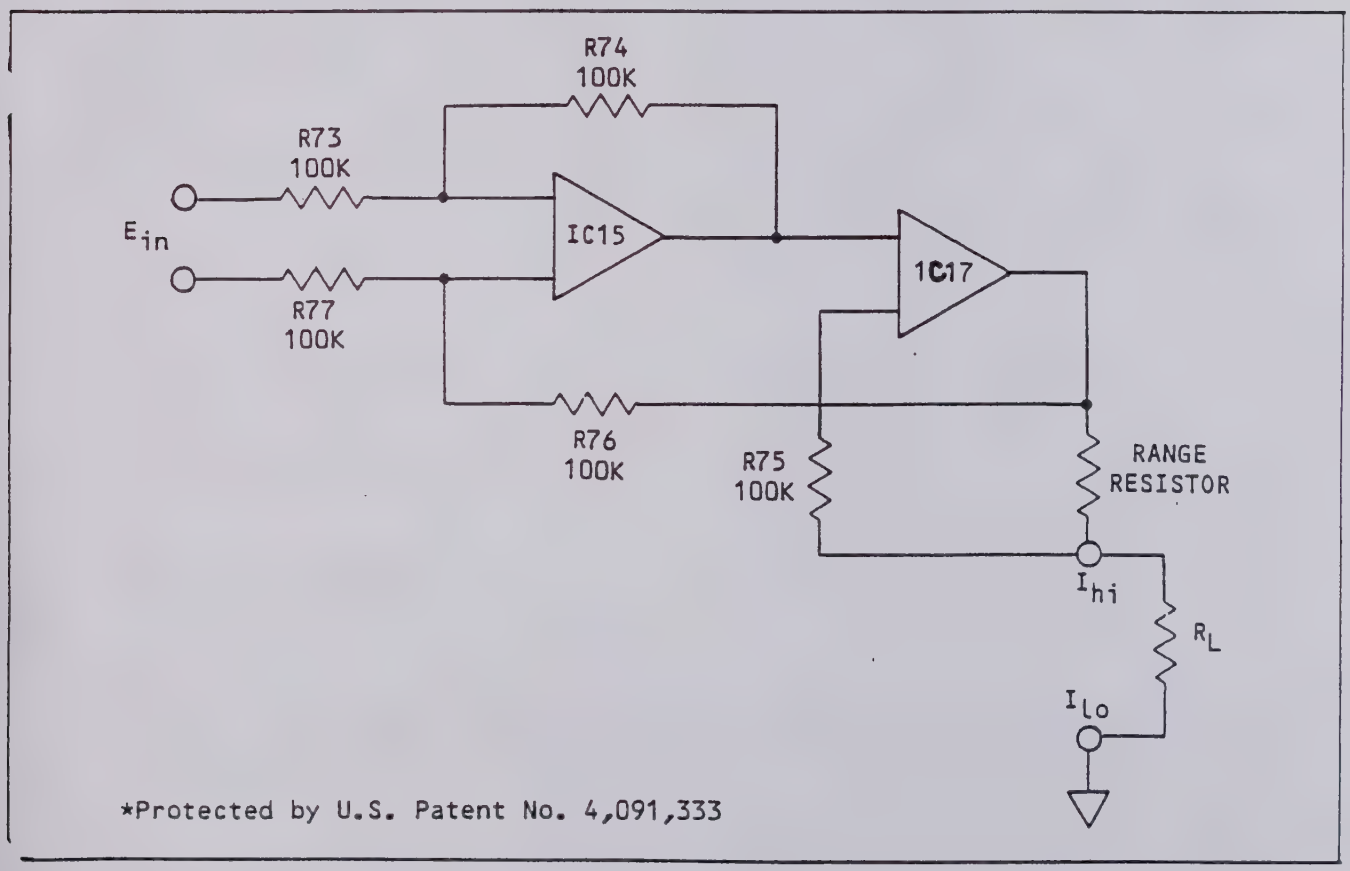

Figure 5-3. Simplified Diagram Transconductance Amplifier

SECTION VI MAINTENANCE

6-1. Introduction

This section of the manual contains maintenance information for the Valhalla Scientific Series 4314 Digital Igniter Testers. It includes a list of required test equipment and a calibration procedure.

6-2. Required Test Equipment

The following test equipment is required for calibration of the tester.

Precision Resistors:

0.1 ohm ± 0.01% Accuracy
100 ohms ± 0.005% Accuracy

6-3. Calibration Procedure

The following procedure should be performed on a routine basis to insure that the instrument remains in calibration. It should also be performed after repair or replacement of any accuracy-determining component. Allow five minutes warm-up time after instrument turn-on before beginning the calibration procedure.

6-3-1. Zero Calibration

1. Select the 200 Ohms range. Connect the Kelvin clips of the input cables to a shorting bar.

2. Adjust R3 to its end stop closest to the front panel. Adjust R60 for a 0000 reading on the panel display.

6-3-2. Range Calibration

1. Select the 200 Ohms range. Connect the Kelvin clips to the 0.1 ohm precision resistor. Adjust R3 for a 0010 reading on the panel display.

2. Connect the Kelvin clips to the 100 ohm precision resistor. Adjust R69 for a display value of 100.00 of ± 2 digits.

3. Check and verify calibration of the remaining ranges of the instrument to the specifications listed in front of this manual.

6-4. Troubleshooting

Apparent difficulties are often due to misinterpretation of the specifications or to noise pickup at the instrument input. Be sure the instrument is truly malfunctioning before attempting repairs.

When attempting to repair a complex instrument, localize the malfunction to the greatest possible extent before beginning the actual process of troubleshooting individual components. For example, if a malfunction is not on one range, check performance on the other ranges to determine whether the malfunction is common to all. This approach saves time and eliminates needless component changes.

Figure 6-1 functionally describes the gates used in the Model 4314. All logic used in the Model 4314 is positive "1" state.

6-4-1. Power Supplies

The +5 volts supply is derived directly from the battery pack. The battery pack voltage will vary from 4.5 to 6.4 volts, depending on battery condition. The -5 volts supply is obtained from a regulated DC/DC converter comprised of Q11, Q12, T1 and IC22. The -10 volts supply is obtained at the junction of CR19 and CR20.

6-4-2. LED Display

Figure 6-2 shows the terminal numbers of the various elements of the LED seven-segment display units. Figure 6-3 shows the alpha characters which may be formed when the instrument malfunctions.

6-4-3. A/D Converter-Ohms Converter

For troubleshooting the A/D converter and the ohms converter, refer to the Theory of Operation, Section V.

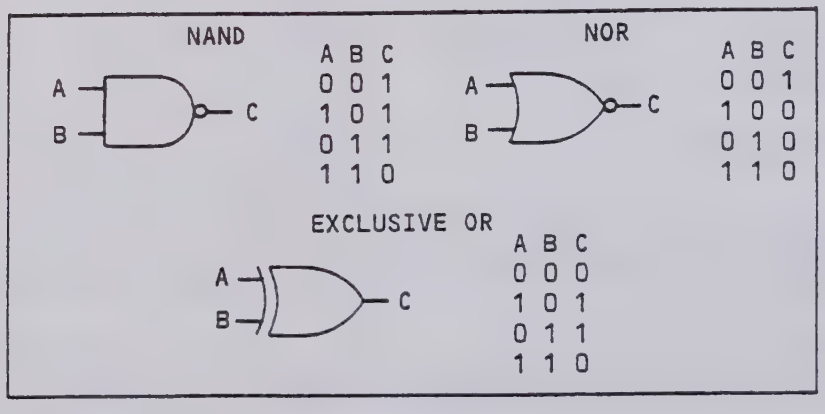

Figure 6-1. Logic Gate Functions.

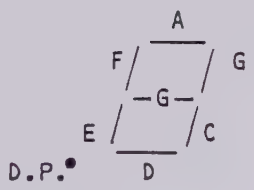

SEGMENT	PIN
A	1
B	13
C	10
D	8
E	7
F	2
G	11
D.P	6

Figure 6-2. LED Pin Numbers

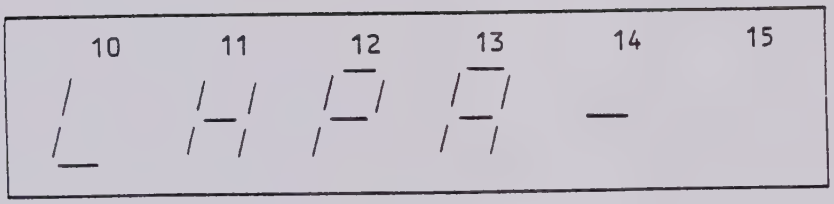

Figure 6-3. Alpha Characters Displayed Under Some Malfunction Conditions.

APPENDIX I PARTS LISTS

The following parts lists are included in this manual:

Parts List	Description	Pages
4314-605	PCB Assbly.	1
4314-606	JN Preamp Assbly.	1
4314-416	Retrofit	1
4314-608	JM Preamp Assbly.	1
4314-400	Unit Assbly.	5
4314-401	Mod A to AH	1
4314-402	UK Assbly.	1
4314-403	Mod A to BN	1
4314-404	Mod A to N	1
4314-405	Mod A to B	1
4314-406	Mod A to AN	1
4314-412	Conv. H to HL	1
4314-413	Conv. UK to UK/2W/SW	1
4314-414	Conv. A to S	2
4314-417	Conv. A to AB	1
4314-419	Conv. A to JN	1
4314-420	Mod A to JM	1
4314-051	DC Unit	2
4314-052	BCD MX	2
4314-052	DC Unit	1
4314-409	Final Assembly	2

REF.DES.	STOCK #	QUANTITY A	T	N	DESCRIPTION	MANUFACTURING/PURCHASING DATA
2	04-30168	1			4314H Preamp/Clamp Bd.	DWG 4314-705
36	80-01122	12			22awg Wire, Brown PVC	M16878/1-BFE-1
37	80-01222	12			22awg Wire, Red PVC	M16878/1-BFE-2
38	80-01322	12			22awg Wire, Orange PVC	M16878/1-BFE-3
39	80-01422	12			22awg Wire, Yellow PVC	M16878/1-BFE-4
40	80-01522	12			22awg Wire, Green PVC	M16878/1-BFE-5
41	80-01622	12			22awg Wire, Blue PVC	M16878/1-BFE-6
42	80-01722	12			22AWG Wire, Violet PVC	M16878/1-BFE-7
43	80-01822	12			22awg Wire, Gray PVC	M16878/1-BFE-8
44	80-01922	12			22awg Wire, White PVC	M16878/1-BFE-9
45	80-01022	12			22awg Wire, Black PVC	M16878/1-BFE-0
C1	02-90006	1			1u 5% 50V Polycarbonate	IMB RA20105J
C2	02-60002	1			0.1u 250V Mylar	Illinois 104MSR250K
C3	02-60002	1			0.1u 250V Mylar	Illinois 104MSR250K
C4	02-60002	1			0.1u 250V Mylar	Illinois 104MSR250K
C5	02-10013	1			1u 50V Ceramic disc	8131-050-651-105M
C6	02-10000	1			0.005u 100V Ceramic disc	SPRAGUE 56AD50
D1	03-20006	1			Diode, low leakage	1N3595
D2	03-20006	1			Diode, low leakage	1N3595
D3	03-20006	1			Diode, low leakage	1N3595
IC1	03-30336	1			Low Noise Precision Chopper Amplifier	7652CPD
IC2	03-30326	1			Dual General Purpose Op Amp	LM358AN
IC3	03-30064	1			2.5V, 1%, 55ppm/C, Reference	MC1403 or MC1503U
R1	01-01073	1			47K 5% 1/4W Carbon Film	RC07GF473J
R2	01-20005	1			9K 0.05% 5ppm/C Wire Wound	Goldstar GS711-9K-.05%-5PPM
R3	01-20016	1			1K 0.05% 5ppm/C Wire Wound	Goldstar GS805-1K-.05%-5PPM
R4	01-01100	1			1M 5% 1/4W Carbon Film	RC07GF105J
R5	01-01001	1			1.0 5% 1/4W Carbon Film	RC07GF1R0J
R6	01-10006	1			100K 1% 50ppm/C 1/4W Metal Film	RN60C1003F
R7	01-10006	1			100K 1% 50ppm/C 1/4W Metal Film	RN60C1003F
R8	01-10078	1			2K 1% 50ppm/C 1/4W Metal Film	RN60C2001F
R9	01-01081	1			100K 5% 1/4W Carbon Film	RC07GF104J
R10	01-10126	1			9.53K 1% 50ppm/C 1/4W Metal Film	RN60C9531F
R11	01-01081	1			100K 5% 1/4W Carbon Film	RC07GF104J
RV1	01-50013	1			1K Top adjust	Beckman 68WR1K

PARTS LIST : 4314-416 Retrofit Modification Assy.

REF.DES.	STOCK #	QUANTITY A	T	N	DESCRIPTION	MANUFACTURING/PURCHASING DATA	ALTERNA
1	30-00071	1			4314 Retrofit Bd. Assy.	ASSY 4314-602	
2	05-10441	2			Tie-wrap block, small	Panduit ABMM-AT	
3	05-10019	5			Cable tie, 4"x 1/8"	Panduit WRN-4	
4	80-01122	19			22awg Wire, Brown PVC	M16878/1-BFE-1	
5	80-01222	15			22awg Wire, Red PVC	M16878/1-BFE-2	
6	80-01322	4			22awg Wire, Orange PVC	M16878/1-BFE-3	
7	80-01422	6			22awg Wire, Yellow PVC	M16878/1-BFE-4	
8	80-01522	12			22awg Wire, Green PVC	M16878/1-BFE-5	
9	80-01622	19			22awg Wire, Blue PVC	M16878/1-BFE-6	
10	80-01722	4			22AWG Wire, Violet PVC	M16878/1-BFE-7	
11	80-01822	4			22awg Wire, Gray PVC	M16878/1-BFE-8	
R57	01-01086	1			220K 5% 1/4W Carbon Film	RC07GF224J	

REF.DES.	STOCK #	QUANTITY A T N	DESCRIPTION	MANUFACTURING/PURCHASING DATA	ALTE
1	04-30168	1	4314H Preamp/Clamp Bd.	DWG 4314-705	
2	80-02122	15	22awg Wire, Brown TFE	M16878/4-BFE-1	
4	80-02322	15	22awg Wire, Orange TFE	M16878/4-BFE-3	
5	80-02422	15	22awg Wire, Yellow TFE	M16878/4-BFE-4	
7	80-02622	15	22awg Wire, Blue TFE	M16878/4-BFE-6	
8	80-02722	15	22awg Wire,Violet TFE	M16878/4-BFE-7	
9	80-02822	15	22awg Wire,Gray TFE	M16878/4-BFE-8	
C1	02-90006	1	1u 5% 50V Polycarbonate	IMB RA20105J	
C2	02-60002	1	0.1u 250V Mylar	Illinois 104MSR250K	
C3	02-60002	1	0.1u 250V Mylar	Illinois 104MSR250K	
C4	02-60002	1	0.1u 250V Mylar	Illinois 104MSR250K	
D1	03-20006	1	Diode, low leakage	1N3595	
D2	03-20006	1	Diode, low leakage	1N3595	
IC1	03-30336	1	Low Noise Precision Chopper Amplifier	7652CPD	
R1	01-01073	1	47K 5% 1/4W Carbon Film	RC07GF473J	
R2	01-20005	1	9K 0.05% 5ppm/C Wire Wound	Goldstar GS711-9K-.05%-5PPM	
R3	01-20016	1	1K 0.05% 5ppm/C Wire Wound	Goldstar GS805-1K-.05%-5PPM	
R4	01-01100	1	1M 5% 1/4W Carbon Film	RC07GF105J	
R5	01-01001	1	1.0 5% 1/4W Carbon Film	RC07GF1R0J	

PARTS LIST : 4314-602 4314 Retrofit Bd. Assy.

REF.DES.	STOCK #	QUANTITY A T N	DESCRIPTION	MANUFACTURING/PURCHASING DATA	ALTERNAT
1	80-00022	10	22awg Buss Wire	1BB-2201 ANIXTER	
A1	04-30226	1	4314 Retrofit Board	DWG 4314-702	
C1	02-60017	1	0.1uF,63V,Mylar,5%	WIMA MKC2-0.1uF	
C2	02-60017	1	0.1uF,63V,Mylar,5%	WIMA MKC2-0.1uF	
C3	02-60017	1	0.1uF,63V,Mylar,5%	WIMA MKC2-0.1uF	
C4	02-60017	1	0.1uF,63V,Mylar,5%	WIMA MKC2-0.1uF	
C5	02-30004	1	1u 25V Tantalum Bead	Kemet T350A105K025AS	
C6	02-60017	1	0.1uF,63V,Mylar,5%	WIMA MKC2-0.1uF	
C7	02-60017	1	0.1uF,63V,Mylar,5%	WIMA MKC2-0.1uF	
D1	03-20006	1	Diode, low leakage	1N3595	
D2	03-20006	1	Diode, low leakage	1N3595	
D3	05-01011	1	LED,Red,Panel Mount		
D4	03-20006	1	Diode, low leakage	1N3595	
D5	03-20006	1	Diode, low leakage	1N3595	
IC1	03-30170	1	Low Noise, low drift Op-amp	OP07DP	
IC2	03-30487	1	Low Noise Chopper Amplifier(8 pin)	LTC1052CN8	
IC3	03-30487	1	Low Noise Chopper Amplifier(8 pin)	LTC1052CN8	
R1	01-10178	1	10K 0.1% 25ppm/C 1/8W Metal Film	PRP 1/8W - 10K - 0.1% - 25PPM	
R2	01-10178	1	10K 0.1% 25ppm/C 1/8W Metal Film	PRP 1/8W - 10K - 0.1% - 25PPM	
R3	01-10178	1	10K 0.1% 25ppm/C 1/8W Metal Film	PRP 1/8W - 10K - 0.1% - 25PPM	
R4	01-10178	1	10K 0.1% 25ppm/C 1/8W Metal Film	PRP 1/8W - 10K - 0.1% - 25PPM	
R5	01-01081	1	100K 5% 1/4W Carbon Film	RC07GF104J	
R6	01-01041	1	1K 5% 1/4W Carbon Film	RC07GF102J	

REF.DES.	STOCK #	QUANTITY A	T	N	DESCRIPTION	MANUFACTURING/PURCHASING DATA	AL
82	04-30009	1			4440 Main Board	DWG 4440-700	
83	04-30010	1			4440 Display Board	DWG 4440-701	
87	05-10049	1			Box, battery, four D cells	Sogyo BH13	
88	04-10529	1			4314A Front Panel (screened)	DWG 4314-100 using 04-10247	
89	05-10198	4			Spacer, 1/4 dia, 1/8 lg, #4, nylon	Smith 8880	
90	05-10199	4			Washer, fib, 1/4 od, 7/64 id, 1/16 tall	Smith 2161	
91	90-04608	4			#4 x 1/2" Self-Tap Phil Pan S.S.		
92	04-10130	1			Chassis	PAKTEK CH250-BEIGE ETC.	
93	05-10521	1			Fuse holder, panel mount	Littlefuse 342004	
94	04-10235	1			4440 Rear Panel (battery unit)	DWG 4440-214	
95	05-10278	1			Nut, Panel, blind	C&K 7099	
96	05-10277	6			Knob, silver	Centralab B-426	
97	05-10019	22			Cable tie, 4"x 1/8"	Panduit WRN-4	
98	80-01422	6			22awg Wire, Yellow PVC	M16878/1-BFE-4	
99	80-01322	10			22awg Wire, Orange PVC	M16878/1-BFE-3	
100	80-01622	27			22awg Wire, Blue PVC	M16878/1-BFE-6	
101	80-01022	20			22awg Wire, Black PVC	M16878/1-BFE-0	
102	80-01922	4			22awg Wire, White PVC	M16878/1-BFE-9	
103	80-01222	25			22awg Wire, Red PVC	M16878/1-BFE-2	
104	80-00022	1			22awg Buss Wire	1BB-2201 ANIXTER	
105	80-01722	7			22AWG Wire, Violet PVC	M16878/1-BFE-7	
106	80-01122	19			22awg Wire, Brown PVC	M16878/1-BFE-1	
107	80-00014	3			14awg Bus Wire		
108	05-10325	4			Cable tie, 14"x.25" reusable	Panduit PRT-4S	
110	30-00071	1			4314 Retrofit Bd. Assy.	ASSY 4314-602	
111	05-10441	2			Tie-wrap block, small	Panduit ABHM-AT	
113	80-01522	12			22awg Wire, Green PVC	M16878/1-BFE-5	
B1	05-10117	1			Battery, ni-cad, heavy duty, D cell	Panasonic P-400D-E15	
B2	05-10117	1			Battery, ni-cad, heavy duty, D cell	Panasonic P-400D-E15	
B3	05-10117	1			Battery, ni-cad, heavy duty, D cell	Panasonic P-400D-E15	
B4	05-10117	1			Battery, ni-cad, heavy duty, D cell	Panasonic P-400D-E15	
C1	02-10009	1			0.001u 50V Creamic disc	NIC NCD102KIVX5P	
C2	02-10009	1			0.001u 50V Creamic disc	NIC NCD102KIVX5P	
C3	02-10000	1			0.005u 100V Ceramic disc	SPRAGUE 56AD50	
C4	02-10002	1			500p 100V Ceramic disc	SPRAGUE 56AT50	
C5	02-10010	1			39p 100V Ceramic disc	CENTRALAD DD390	
C6	02-10010	1			39p 100V Ceramic disc	CENTRALAD DD390	
C7	02-30001	1			10u 25V Tantalum Bead	AVX TAP106K025SP	
C8	02-10009	1			0.001u 50V Creamic disc	NIC NCD102KIVX5P	
C10	02-10000	1			0.005u 100V Ceramic disc	SPRAGUE 56AD50	
C11	02-10000	1			0.005u 100V Ceramic disc	SPRAGUE 56AD50	
C12	02-10000	1			0.005u 100V Ceramic disc	SPRAGUE 56AD50	
C13	02-10000	1			0.005u 100V Ceramic disc	SPRAGUE 56AD50	
C20	02-30001	1			10u 25V Tantalum Bead	AVX TAP106K025SP	
C21	02-50000	1			0.22u 10% 50V Polystyrene	F-Dyne FSA 0.22uF 10% or Equiv.	
C22	02-10005	1			50p 500V Ceramic disc	ILLIONS 500BCR050K	0
C23	02-10004	1			0.02u 500V Ceramic disc	SPRAGUE 140CD500Z9-203Z	
C25	02-30001	1			10u 25V Tantalum Bead	AVX TAP106K025SP	
C26	02-10007	1			330p 1000V Ceramic disc	SPRAGUE 56AT33	
C27	02-10007	1			330p 1000V Ceramic disc	SPRAGUE 56AT33	
C32	02-30003	1			47u 10V Tantalum Bead	AVX TAP476M020SP	

REF.DES.	STOCK #	QUANTITY A T N	DESCRIPTION	MANUFACTURING/PURCHASING DATA	ALTERNA
C33	02-30001	1	10u 25V Tantalum Bead	AVX TAP106K025SP	
C34	02-10009	1	0.001u 50V Creamic disc	NIC NCD102KIVX5P	
C35	02-30001	1	10u 25V Tantalum Bead	AVX TAP106K025SP	
C36	02-10000	1	0.005u 100V Ceramic disc	SPRAGUE 56AD50	
C41	02-30001	1	10u 25V Tantalum Bead	AVX TAP106K025SP	
C44	02-40004	1	2200u 16V Aluminum	Illinois 228TTA016	
CR2	03-20000	1	Diode, general purpose	1N4148 or 1N914	
CR3	03-20002	1	Diode, rectifier, 1A, 50V	1N4001-1N4007	
CR4	03-20002	1	Diode, rectifier, 1A, 50V	1N4001-1N4007	
CR5	03-20002	1	Diode, rectifier, 1A, 50V	1N4001-1N4007	
CR6	03-20002	1	Diode, rectifier, 1A, 50V	1N4001-1N4007	
CR9	03-20002	1	Diode, rectifier, 1A, 50V	1N4001-1N4007	
CR12	03-20000	1	Diode, general purpose	1N4148 or 1N914	
CR13	03-20000	1	Diode, general purpose	1N4148 or 1N914	
CR14	03-20000	1	Diode, general purpose	1N4148 or 1N914	
CR15	03-20000	1	Diode, general purpose	1N4148 or 1N914	
CR16	03-20000	1	Diode, general purpose	1N4148 or 1N914	
CR17	03-20041	1	Zener, reference, 6.3V, 20ppm/C, 5%	1N825	
CR18	03-20002	1	Diode, rectifier, 1A, 50V	1N4001-1N4007	
CR19	03-20000	1	Diode, general purpose	1N4148 or 1N914	
CR20	03-20000	1	Diode, general purpose	1N4148 or 1N914	
CR29	03-20000	1	Diode, general purpose	1N4148 or 1N914	
CR30	03-20000	1	Diode, general purpose	1N4148 or 1N914	
CR31	03-20000	1	Diode, general purpose	1N4148 or 1N914	
DS1	05-01020	1	Display,LED,Red,+/-1	Hewlett Packard,QDSP-3789 Bin B	
DS2	05-01010	1	Display,LED,Red,0-9	Hewlett Packard,5082-7650-S02	
DS3	05-01010	1	Display,LED,Red,0-9	Hewlett Packard,5082-7650-S02	
DS4	05-01010	1	Display,LED,Red,0-9	Hewlett Packard,5082-7650-S02	
DS5	05-01010	1	Display,LED,Red,0-9	Hewlett Packard,5082-7650-S02	
DS6	05-01005	1	Single LED,Red,Small	Hewlett Packard,HLMP1000	
F1	05-04001	1	2A,Fuse	Littlefuse,312-002	
IC1	03-30022	1	LCD Display Driver (CMOS)	4054BE	
IC2	03-30023	1	Quad Analog Switch (CMOS)	4066BF (Ceramic)	
IC3	03-30023	1	Quad Analog Switch (CMOS)	4066BF (Ceramic)	
IC4	03-30024	1	Quad 2 Input NOR (CMOS)	4001BE	
IC5	03-30025	1	Quad 2 Input Exclusive OR (CMOS)	4030BE	
IC6	03-30026	1	Dual D-Type Flip Flop (CMOS)	4013BE	
IC7	03-30029	1	LSI Logic	Hughes HC-4010-0-P-000	
IC8	03-30026	1	Dual D-Type Flip Flop (CMOS)	4013BE	
IC9	03-30027	1	Quad 2 Input NAND (CMOS)	4011BE	
IC10	03-30106	1	BCD to 7-Segment decoder/driver	74LS47N	
IC11	03-30012	1	A to D Converter Logic	Mostek MK5009	
IC12	03-30074	1	General Purpose JFET Op-Amp,Metal Can	LF356H	
IC13	03-30017	1	Op-Amp,Uncompensated	LM308H	
IC14	03-30013	1	Op-Amp,General Purpose,Uncompensated	LM301AH or LM301AN	
IC15	03-30031	1	Quad Op-Amp,General Purpose	LM324N	
IC17	03-30074	1	General Purpose JFET Op-Amp,Metal Can	LF356H	
IC22	03-30035	1	Regulator,-5V,0.5A,TO202 or TO220	79M05CP or LM320T-5.0	
J1	05-10030	1	Banana jack, red	Pomona 1581-2	
J2	05-10030	1	Banana jack, red	Pomona 1581-2	
J3	05-10031	1	Banana jack, white	Pomona 1581-9	

REF.DES.	STOCK #	QUANTITY A T N	DESCRIPTION	MANUFACTURING/PURCHASING DATA	ALT
J4	05-10033	1	Battery Charging Jack	Switchcraft 712A	
J5	05-10031	1	Banana jack, white	Pomona 1581-9	
Q1	03-10003	1	NPN Darlington Transistor (TO92)	2N5172	
Q2	03-10003	1	NPN Darlington Transistor (TO92)	2N5172	
Q3	03-10003	1	NPN Darlington Transistor (TO92)	2N5172	
Q4	03-10003	1	NPN Darlington Transistor (TO92)	2N5172	
Q5	03-10003	1	NPN Darlington Transistor (TO92)	2N5172	
Q6	03-10003	1	NPN Darlington Transistor (TO92)	2N5172	
Q8	03-10015	1	NPN Transistor (TO220)	MJE3439	
Q9	03-10000	1	N-Channel JFET	U1899E	
Q11	03-10003	1	NPN Darlington Transistor (TO92)	2N5172	
Q12	03-10003	1	NPN Darlington Transistor (TO92)	2N5172	
Q15	03-10004	1	P-Channel JFET	P1087E (selected)	
Q17	03-10010	1	PNP Transistor (TO92)	2N4402	
R1	01-01073	1	47K 5% 1/4W Carbon Film	RC07GF473J	
R2	01-01073	1	47K 5% 1/4W Carbon Film	RC07GF473J	
R3	01-50005	1	50K single turn	CTS X201R503	
R4	01-01073	1	47K 5% 1/4W Carbon Film	RC07GF473J	
R5	01-01081	1	100K 5% 1/4W Carbon Film	RC07GF104J	
R6	01-01073	1	47K 5% 1/4W Carbon Film	RC07GF473J	
R7	01-01073	1	47K 5% 1/4W Carbon Film	RC07GF473J	
R8	01-01120	1	12M 5% 1/4W Carbon Film	RC07GF126J	
R9	01-01119	1	10M 5% 1/4W Carbon Film	RC07GF106J	
R10	01-01031	1	390 5% 1/4W Carbon Film	RC07GF391J	
R11	01-01031	1	390 5% 1/4W Carbon Film	RC07GF391J	
R12	01-01031	1	390 5% 1/4W Carbon Film	RC07GF391J	
R13	01-01031	1	390 5% 1/4W Carbon Film	RC07GF391J	
R14	01-01031	1	390 5% 1/4W Carbon Film	RC07GF391J	
R15	01-01031	1	390 5% 1/4W Carbon Film	RC07GF391J	
R16	01-01031	1	390 5% 1/4W Carbon Film	RC07GF391J	
R17	01-01031	1	390 5% 1/4W Carbon Film	RC07GF391J	
R18	01-01067	1	24K 5% 1/4W Carbon Film	RC07GF243J	
R19	01-01021	1	100 5% 1/4W Carbon Film	RC07GF101J	
R22	01-10038	1	90.9K 0.1% 50ppm/C 1/4W Metal Film	RN60C9092B	
R23	01-50000	1	100 Single-turn	CTS X201R101	
R24	01-10037	1	10K 0.1% 50ppm/C 1/4W Metal Film	RN60C1002B	
R25	01-01081	1	100K 5% 1/4W Carbon Film	RC07GF104J	
R26	01-01081	1	100K 5% 1/4W Carbon Film	RC07GF104J	
R27	01-01081	1	100K 5% 1/4W Carbon Film	RC07GF104J	
R28	01-01061	1	10K 5% 1/4W Carbon Film	RC07GF103J	
R29	01-10039	1	274K 1% 50ppm/C 1/4W Metal Film	RN60C2743F	
R30	01-01080	1	91K 5% 1/4W Carbon Film	RC07GF913J	
R48	01-01073	1	47K 5% 1/4W Carbon Film	RC07GF473J	
R49	01-01018	1	75 5% 1/4W Carbon Film	RC07GF750J	
R50	01-01045	1	2K 5% 1/4W Carbon Film	RC07GF202J	
R51	01-01041	1	1K 5% 1/4W Carbon Film	RC07GF102J	
R52	01-01065	1	20K 5% 1/4W Carbon Film	RC07GF203J	
R53	01-01051	1	3.9K 5% 1/4W Carbon Film	RC07GF392J	
R54	01-01128	1	1000M 5% 1/4W Carbon Film	RC07GF108J	
R55	01-01045	1	2K 5% 1/4W Carbon Film	RC07GF202J	
R56	01-01007	1	10 5% 1/4W Carbon Film	RC07GF100J	

REF.DES.	STOCK #	QUANTITY A	T	N	DESCRIPTION	MANUFACTURING/PURCHASING DATA	ALTERNAT
R57	01-01086	1			220K 5% 1/4W Carbon Film	RC07GF224J	
R58	01-10000	1			FACTORY SELECT VALUE	RN60CXXX	
R59	01-10037	1			10K 0.1% 50ppm/C 1/4W Metal Film	RN60C1002B	
R60	01-50005	1			50K single turn	CTS X201R503	
R62	01-10037	1			10K 0.1% 50ppm/C 1/4W Metal Film	RN60C1002B	
R63	01-01102	1			1.5M 5% 1/4W Carbon Film	RC07GF155J	
R64	01-01053	1			4.7K 5% 1/4W Carbon Film	RC07GF472J	
R65	01-01028	1			270 5% 1/4W Carbon Film	RC07GF271J	
R66	01-10037	1			10K 0.1% 50ppm/C 1/4W Metal Film	RN60C1002B	
R67	01-10215	1			1.65K 1% 50ppm/C 1/4W Metal Film	RN60C1651F	
R68	01-10037	1			10K 0.1% 50ppm/C 1/4W Metal Film	RN60C1002B	
R69	01-50000	1			100 Single-turn	CTS X201R101	
R70	01-10073	1			9.76K 1% 50ppm/C 1/4W Metal Film	RN60C9761F	
R71	01-10073	1			9.76K 1% 50ppm/C 1/4W Metal Film	RN60C9761F	
R72	01-01053	1			4.7K 5% 1/4W Carbon Film	RC07GF472J	
R73	01-10049	1			100K 0.1% 50ppm/C 1/4W Metal Film	RN60C1003B	
R74	01-10049	1			100K 0.1% 50ppm/C 1/4W Metal Film	RN60C1003B	
R75	01-01081	1			100K 5% 1/4W Carbon Film	RC07GF104J	
R76	01-10049	1			100K 0.1% 50ppm/C 1/4W Metal Film	RN60C1003B	
R77	01-10049	1			100K 0.1% 50ppm/C 1/4W Metal Film	RN60C1003B	
R78	01-10215	1			1.65K 1% 50ppm/C 1/4W Metal Film	RN60C1651F	
R80	01-01004	1			4.7 5% 1/4W Carbon Film	RC07GF4R7J	
R81	01-01048	1			2.7K 5% 1/4W Carbon Film	RC07GF272J	
R82	01-01048	1			2.7K 5% 1/4W Carbon Film	RC07GF272J	
R91	01-01093	1			470K 5% 1/4W Carbon Film	RC07GF474J	
R92	01-01093	1			470K 5% 1/4W Carbon Film	RC07GF474J	
R93	01-01031	1			390 5% 1/4W Carbon Film	RC07GF391J	
R94	01-01031	1			390 5% 1/4W Carbon Film	RC07GF391J	
R95	01-01031	1			390 5% 1/4W Carbon Film	RC07GF391J	
R104	01-10000	1			FACTORY SELECT VALUE	RN60CXXX	
R105	01-01061	1			10K 5% 1/4W Carbon Film	RC07GF103J	
R106	01-01081	1			100K 5% 1/4W Carbon Film	RC07GF104J	
R107	01-01033	1			470 5% 1/4W Carbon Film	RC07GF471J	
R109	01-01128	1			1000M 5% 1/4W Carbon Film	RC07GF108J	
R110	01-01061	1			10K 5% 1/4W Carbon Film	RC07GF103J	
R112	01-01036	1			620 5% 1/4W Carbon Film	RC07GF621J	
R113	01-01007	1			10 5% 1/4W Carbon Film	RC07GF100J	
R114	01-20013	1			100 0.05% 5ppm/C Wire Wound	Goldstar GS711-100R-.05%-5PPM	
R115	01-20004	1			900 0.05% 5ppm/C Wire Wound	Goldstar GS711-900R-.05%-5PPM	
R116	01-20005	1			9K 0.05% 5ppm/C Wire Wound	Goldstar GS711-9K-.05%-5PPM	
R117	01-20006	1			90K 0.05% 5ppm/C Wire wound	Goldstar GS711-90K-.05%-5PPM	
R120	01-01004	1			4.7 5% 1/4W Carbon Film	RC07GF4R7J	
R121	01-01007	1			10 5% 1/4W Carbon Film	RC07GF100J	
S2	05-03005	1			Switch,6 Station,Int-Lock,6 Pole,Chrome	Centralab,ZKBC000600864+B426	
S3	05-03015	1			Toggle,2PDT	C&K,7201-7760-7062-3	
T1	04-20006	1			4440 Transformer (DC to DC Converter)	DWG 4440-010	
XIC2	05-10041	1			Socket, dil, 14 pin	Burndy 8514-01	
XIC3	05-10041	1			Socket, dil, 14 pin	Burndy 8514-01	
XIC7	05-10042	1			Socket, dil, 24 pin	TI 8524-01	
XIC11	05-10008	1			Socket, dil, 16 pin	Burndy C8516-01	
XIC15	05-10041	1			Socket, dil, 14 pin	Burndy 8514-01	

REF.DES.	STOCK #	QUANTITY A	T	N	DESCRIPTION	MANUFACTURING/PURCHASING DATA	A
Y1	05-02000	1			1.0M 0.005% Crystal	HC6-1MHz-0.005%	

Valhalla Scientific Inc.

WIRE TAB TABLE

BCD - MX

MODEL 4314

DRW NO 4314-052
SHT 1 OF 2

#	FROM	TERMINATION	TO	TERMINATION	AWG	COLOR	LEN	REMARKS
1	J100-1	SOLDER	J100-6	SOLDER	22	BOSS	1/2	SEE MOD DWG 4314-401
2	J100-6	AND	J100-11	AND				
3	J100-11	SLEEVE	J100-16	SLEEVE				
4	J100-2		J100-7					
5	J100-7		J100-12					
6	J100-12		J100-17					
7	J100-3		J100-8					
8	J100-8		J100-13					
9	J100-13		J100-18					
10	J100-4		J100-9					
11	J100-9		J100-14					
12	J100-14		J100-19					
13	J100-22		J100-23					
14	J100-24		J100-23					
15	J100-24		J100-50					
16	J100-5		J100-26					
17	J100-26		J100-33					
18	J100-1	SOLDER	4314-401 A	SOLDER		BLK	11	
19	J100-2		4314-401 B					
20	J100-3		4314-401 C					
21	J100-4		4314-401 D					
22	J100-22		4314-401 E					
23	4314-401 IC5-4		4314-401 F					
24	J100-21		4314-401 G					

Valhalla Scientific Inc.	PARTS LIST	4314HL FINAL ASSEMBLY	MODEL 4314 HL	DWG NO 4314-411	REV A

#	REF DES	VALHALLA PART NO	DESCRIPTION	CODE IDENT	MFG PART NO	QTY. I	QTY. N	I	N		REMARKS
1			4314A WITH BCD		4314-400	1					
2											
3											
4											
5	DELETE THE FOLLOWING FROM 4314-400										
6	S3	5-03015	TOGGLE SWITCH	C+K	7201SYZQ	1					
7		4-10235	REAR PANEL		4440-214	1					
8		4-10529	4314A FRONT PANEL		4314-100	1					
9	R117	1-20006	90K, 0.05%, 5PPM	G.S.	GS711-90K-.05%-5PPM	1					
10	R116	1-20005	9K, 0.05%, 5PPM	G.S.	GS711-9K-.05%-5PPM	1					
11	R115	1-20004	900Ω, 0.05%, 5PPM	G.S.	GS711-900R-.05%-5PPM	1					
12	R114	1-20013	100Ω, 0.05%, 5PPM	G.S.	GS711-100R-.05%-5PPM	1					
13	R104		FACTORY SELECT →		MAY NOT BE PRESENT	1					
14											
15	ADD THE FOLLOWING TO THE 4314										
16			BCD/REM 1 REAR PANEL		4314-206	1					
17		4-10707	4314HL FRONT PANEL		4314-110	1					
18			4314H PREAMP BD. ASSY.		4314-605	1					
19	RV2	1-50051	100K PANEL MOUNT	A+B	SPS G016 S104U	1					
20			SCREW SELF TAPPING		4 x 1/4"	2					
21			WASHER, FLAT		#4	2					
22			CABLE TIE, 4" x 1/8"	PANDUIT	WKN4						
23		5-10533	6 PIN, DIN RECEPTICAL	HIRSCHMAN	DIN45322	1					

NOTES: SEE SHT 3 AND 4 FOR ASSEMBLY DWG.

Valhalla Scientific Inc.	PARTS LIST	4314 HL FINAL ASSEMBLY	MODEL 4314 HL	DWG NO 4314-411	RE A

#	REF DES	VALHALLA PART NO	DESCRIPTION	CODE IDENT	MFG PART NO	QTY. I	QTY. N	I	N		REMARKS
24			WIRE BLACK		20 AWG	12"					
25			WIRE BROWN		20 AWG	12"					
26			WIRE RED		20 AWG	12"					
27			WIRE ORANGE		20 AWG	12"					
28			WIRE YELLOW		20 AWG	12"					
29			WIRE GREEN		20 AWG	12"					
30			WIRE BUS		20 AWG	2"					
31	R117-B	1-10092	90M, 0.1%, 80PPM	CADDOCK	MG721-90M-0.1%	1					
32	R117-A	1-10018	9M, 1%, 15PPM	CADDOCK	TF050N-9M-1%-15PPM	1					
33	R116-B	1-20007	900K, 0.05%, 5PPM	G.S.	GS805-900K-.05%-5PPM	1					
34	R116-A	1-20006	90K, 0.05%, 5PPM	G.S.	GS711-90K-.05%-5PPM	1					
35	R114	1-20014	10K, 0.05%, 5PPM	G.S.	GS711-10K-.05%-5PPM	1					
36		5-10134	KNOB, BLACK, 10MM		021-2220	1					
37		5-10135	CAP RED FOR 5-10134		040-1030	1					
38											
39											
40											
41											
42											
43											
44											
45											
46											

NOTES:

Valhalla Scientific Inc.	PARTS LIST	4314 H FINAL ASSEMBLY	MODEL 4314 H	DWG NO 4314-409	RE B

#	REF DES	VALHALLA PART NO	DESCRIPTION	CODE IDENT	MFG PART NO	QTY. I	QTY. N	I	N		REMARKS
1			4314A WITH BCD		4314-400	1					
2											
3											
4											
5	DELETE THE FOLLOWING FROM 4314-400										
6	S3	5-03015	TOGGLE SWITCH	C+K	7201SYZQ	1					
7		4-10352	4440 "BCD" REAR PANEL	VALHALLA	4440-218	1					ECR#932
8		4-10529	4314A FRONT PANEL		4314-100	1					
9	R117	1-20006	90K, 0.05%, 5PPM	G.S.	GS711-90K-.05%-5PPM	1					
10	R116	1-20005	9K, 0.05%, 5PPM	G.S.	GS711-9K-.05%-5PPM	1					
11	R115	1-20004	900Ω, 0.05%, 5PPM	G.S.	GS711-900R-.05%-5PPM	1					
12	R114	1-20013	100Ω, 0.05%, 5PPM	G.S.	GS711-100R-.05%-5PPM	1					
13	R104		FACTORY SELECT →		MAY NOT BE PRESENT	1					
14											
15	ADD THE FOLLOWING TO THE 4314										
16		4-10667	BCD/REM 1 REAR PANEL		4314-206	1					ECR#932
17		4-10668	4314 H FRONT PANEL		4314-108	1					ECR#932
18			4314H PREAMP BD.ASSY.		4314-605	1					
19	RV2	1-50051	100K PANEL MOUNT		WA2G056S104U	1					ECR#932
20			SCREW SELF TAPPING		4 x 1/4"	2					
21			WASHER, FLAT		#4	2					
22		5-10019	CABLE TIE, 4" x 1/8"	PANDUIT	WRN4	6					ECR#932
23		5-10533	6 PIN, DIN RECEPTICAL	HIRSCHMAN	DIN45322	1					

NOTES: SHEETS 1 & 2 ARE ASSY DWGS.

Valhalla Scientific Inc.	PARTS LIST	4314 H FINAL ASSEMBLY	MODEL 4314 H	DWG NO 4314-409	REV B

#	REF DES	VALHALLA PART NO	DESCRIPTION	CODE IDENT	MFG PART NO	QTY. I	QTY. N	I	N		REMARKS
24			WIRE BLACK		20 AWG	12"					
25			WIRE BROWN		20 AWG	12"					
26			WIRE RED		20 AWG	12"					
27			WIRE ORANGE		20 AWG	12"					
28			WIRE YELLOW		20 AWG	12"					
29			WIRE GREEN		20 AWG	12"					
30											
31	R117	1-10092	90M, 0.1%, 80PPM	CADDOCK	MG721-90M-0.1%	1					
32	R116-A	1-10018	9M, 1%, 15PPM	CADDOCK	TF050N-9M-1%-15PPM	1					
33	R116-B	1-20007	900K, 0.05%, 5PPM	G.S.	GS805-900K-.05%-5PPM	1					
34	R115	1-20006	90K, 0.05%, 5PPM	G.S.	GS711-90K-.05%-5PPM	1					
35	R114	1-20014	10K, 0.05%, 5PPM	G.S.	GS711-10K-.05%-5PPM	1					
36		5-10134	KNOB, BLACK, 10MM		021-2220	1					
37		5-10135	CAP RED FOR 5-10134		040-1030	1					
38											
39											
40											
41											
42											
43											
44											
45											
46											

NOTES:

Valhalla Scientific Inc.

WIRE TAB TABLE

BCD - MX

MODEL 4314

DRW NO 4314-052
SHT 1 OF 2

#	FROM	TERMINATION	TO	TERMINATION	AWG	COLOR	LEN	REMARKS
1	J100-1	SOLDER	J100-6	SOLDER	22	BOSS	1/2	SEE MOD DWG 4314-401
2	J100-6	AND	J100-11	AND				
3	J100-11	SLEEVE	J100-16	SLEEVE				
4	J100-2		J100-7					
5	J100-7		J100-12					
6	J100-12		J100-17					
7	J100-3		J100-8					
8	J100-8		J100-13					
9	J100-13		J100-18					
10	J100-4		J100-9					
11	J100-9		J100-14					
12	J100-14		J100-19					
13	J100-22		J100-23					
14	J100-24		J100-23					
15	J100-24		J100-50					
16	J100-5		J100-26					
17	J100-26		J100-33					
18	J100-1	SOLDER	4314-401 A	SOLDER		BLK	11	
19	J100-2		4314-401 B					
20	J100-3		4314-401 C					
21	J100-4		4314-401 D					
22	J100-22		4314-401 E					
23	4314-401 IC5-4		4314-401 F					
2	J100-24		4314-401 G					

Valhalla Scientific Inc.

WIRE TAB TABLE

BCD MX

MODEL 4314

DRW NO 4314 - 052
SHT 2 OF 2

#	FROM	TERMINATION	TO	TERMINATION	AWG	COLOR	LEN	REMARKS
25	J100-26	SOLDER	4314-401 H	SOLDER	22	BLK	11	
26	J100-29	↓	4314-401 J	↓	↓	↓	↓	
27	J100-30	↓	4314-401 K	↓	↓	↓	↓	
28	J100-31	↓	4314-401 M	↓	↓	↓	↓	
29	J100-32	↓	4314-401 N	↓	↓	↓	↓	
30		↓		↓	↓	↓	↓	
31		↓		↓	↓	↓	↓	
32		↓		↓	↓	↓	↓	

Valhalla Scientific Inc.	PARTS LIST	MODIFICATION P/L FOR 4314A TO 4314JM	MODEL 4314 JM	DWG NO 4314-420	REV A

#	REF DES	VALHALLA PART NO	DESCRIPTION	CODE IDENT	MFG PART NO	I	N	I	N		REMARKS
1	START WITH A 4314A FINNISHED UNIT			VALHALLA	4314-400	1					
2	DELETE	4-10529	FRONT PANEL			1					
3	DELETE	5-10277	BUTTONS, SILVER			4					
4	DELETE	5-10030	BANANA JACK RED			1					
5	DELETE	5-10031	BANANA JACK WHT.			1					
6	DELETE	5-03015	SWITCH, TOGGLE			1					
7	DELETE	5-10278	DRESS NUT			1					
8	DELETE	5-10235	REAR PANEL			1					
9	ADD	4-10920	4314 JM FRONT PANEL			1					
10	ADD	5-10812	PANEL ADAPTER			1					
11	ADD	1-50021	100k END ADJUST			1					
12	ADD	4-10708	UK-2W-SW REAR PANEL			1					
13	ADD	5-03062	KEY SWITCH			1					
14	ADD		4314 JM PREAMP ASSY	VALHALLA	4314-608	1					
15	DELETE FROM THE MAIN BD. ASSY- 4314-600										
16	R114	1-20013	100Ω 0.05%			1					
17	R115	1-20004	900 Ω 0.05%			1					
18	R116	1-20005	9K Ω 0.05%			1					
19	R117	1-20006	9K Ω 0.05%			1					
20	ADD THE FOLLOWING TO THE MAIN BD. ASSY.				4314-600						
21	R114	1-20017	100K Ω 0.05%			1					
22		96-04504	SCREW SELF TAPPING		# 4 X 1/4"	2					
23											

NOTES:

Valhalla Scientific Inc.	PARTS LIST	MODIFICATION P/L 4314A TO 4314B	MODEL 4314B	DWG NO 4314-405	REV A

#	REF DES	VALHALLA PART NO	DESCRIPTION	CODE IDENT	MFG PART NO	QTY I	QTY N	I	N		REMARKS
1	START WITH	4314 A	FINISHED UNIT.	VALHALLA	4314-400	1					
2											
3											
4	DELETE SHAFT ON S2A AND JUMPER SWITCH										
5	ADD	5-10250	HOLE PLUG .305 MD 3/8 OD	SMITH	3090 BLACK	1					
6											
7	DELETE	4-10529	4314A FRONT PANEL	VALHALLA	4314-100	1					
8	ADD	4-10531	4314B FRONT PANEL	VALHALLA	4314-102	1					
9											
10											

NOTES:

SHT 1 OF 1

Valhalla Scientific Inc.	PARTS LIST	MODIFICATION P/L 4314A TO 4314N	MODEL 4314N	DWG NO 4314-404	REV B

#	REF DES	VALHALLA PART NO	DESCRIPTION	CODE IDENT	MFG PART NO	QTY I	QTY N	I	N		REMARKS
1	START WITH 4314A		FINISHED UNIT	VALHALLA	4314-400	1					
2											
3	ADD R118	1-10030	9.9MΩ 0.1% 15PPM	CADDOCK	1776-35	1					
4	ADD R119	1-10092	90MΩ 0.1% 80 PPM	CADDOCK	MG721-90M-0.1%	1					
5											
6	DELETE	4-10529	4314A FRONT PANEL	VALHALLA	4314-100	1					
7	ADD	4-10533	4314N FRONT PANEL	VALHALLA	4314-104	1					
8											
9											
10											

NOTES: SHT. 1 IS THE ASSY. DWG.

Valhalla Scientific Inc.	PARTS LIST	CONVERSION P/L 4314UK TO 4314UK-2W-SW	MODEL 4314UK-2W-SW	DWG NO 4314-413	REV B

#	REF DES	VALHALLA PART NO	DESCRIPTION	CODE IDENT	MFG PART NO	QTY. I	QTY. N	I	N		REMARKS
1											
2		START WITH COMPLETE 4314UK				1					
3											
4		DELETE THE FOLLOWING:									
5											
6		4-10587	4314UK FRONT PANEL(SCREENED)	VALHALLA	4314-106	1					
7		4-10235	4440 REAR PANEL(BATTERY UNIT)	VALHALLA	4440-216	1					
8		5-10030	BANANA JACK(RED)	05276	1581-2	1					
9		5-10031	BANANA JACK(WHITE)	05276	1581-9	1					
10		5-03015	TOGGLE SWITH	C&K	7201SYZQ	1					
11											
12		ADD THE FOLLOWING:									
13											
14		4-10710	4314UK-2W-SW FRONT PANEL	VALHALLA	4314-111	1					
15		4-10708	4314UK-2W-SW REAR PANEL	VALHALLA	4314-208	1					
16		5-03062	KEYSWITCH, 2 POLE, W/2 KEYS	C&K	Y201-13-0-A1-01-Q4	1					
17											
18											
19											
20											
21											
22											
23											

NOTES: SHT. 1 OF 2 IS ASSEMBLY DWG.

Valhalla Scientific Inc.	PARTS LIST	4314A TO 4314AB CONVESION PARTS LIST	MODEL 4314AB	DWG NO 4314-417	REV A

#	REF DES	VALHALLA PART NO	DESCRIPTION	CODE IDENT	MFG PART NO	QTY. I	QTY. N	I	N		REMARKS
1.											
2.			START WITH A COMPLETE 4314A								
3.											
4.			DELETE THE FOLLOWING FROM 4314A								
5.		04-10529	FRONT PANEL (SCREENED)	VALHALLA	4314-100	1					
6.		04-10235	REAR PANEL	VALHALLA	4440-214	1					
7.	J1, J2	05-10030	BANANA JACK (RED)		1581-2	2					
8.	J3, J4	05-10031	BANANA JACK (WHITE)		1581-9	2					
9.		05-10277	SILVER BUTTON	71590	B426	4					
10.	R115	01-20004	RES FXD 900Ω 0.05%		J110-900	1					
11.	R116	01-20005	RES FXD 9K 0.05%		J110-9K	1					
12.	R117	01-20006	RES FXD 90K 0.05%		J110-90K	1					
13.											
14.			ADD THE FOLLOWING TO 4314A								
15.		04-10867	4314AB FRONT PANEL	VALHALLA	4314-113	1					
16.		04-10866	REAR PANEL	VALHALLA	4314-210	1					
17.		05-10533	6 PIN DIN RECEPTICAL	HIRSCHMAN	DIN45322	1					
18.		05-10514	6 PIN DIN PLUG	SWITHCRAFT	12GM6M	1					
19.		80-00014	14AWG BUS WIRE			12"					
20.		70-11014	14AWG TEFLON SLEEVING			12"					
21.											
22.											
23.											

NOTES: SEE SHT 2 OF 2 FOR ASSEMBLY DRAWING

Valhalla Scientific Inc.	PARTS LIST	CONVERSION FROM 4314H TO 4314HL	MODEL 4314HL	DWG NO 4314-412	REV A

#	REF DES	VALHALLA PART NO	DESCRIPTION	CODE IDENT	MFG PART NO	QTY. I	QTY. N	I	N		REMARKS
1		START WITH COMPLETE 4314H				1					
2											
3		DELETE THE FOLLOWING FROM 4314-409									
4											
5	R115	1-20006	90K, 0.05%, 5PPM		GS711-90K-05%-5PPM	1					
6	R116B	1-20007	900K, 0.05%, 5PPM		GS805-900K-05%-5PPM	1					
7	R116A	1-10018	9MΩ, 1%, 15 PPM	CADDOCK	TF050N-9M-1%-15PPM	1					
8	R117	1-10092	90MΩ, 0.1%, 80PPM	CADDOCK	MG721-90M-0.1%, 80PPM	1					
9		4-10667	4314H FRONT PANEL	VALHALLA	4314-108	1					
10											
11		ADD THE FOLLOWING TO 4314									
12											
13		4-10707	4314HL FRONT PANEL	VALHALLA	4314-110	1					
14	R116A	1-20006	90K, 0.05%, 5PPM		GS711-90K-.05%-5PPM	1					
15	R116B	1-20007	900K, 0.05%, 5PPM		GS805-900K-.05%-5PPM	1					
16	R117A	1-10018	9MΩ, 1%, 15 PPM	CADDOCK		1					
17	R117B	1-10092	90MΩ, 0.1%, 80PPM	CADDOCK		1					
18											
19			WIRE BUS		20AWG	2"					
20			WIRE BLACK		20AWG	12"					
21			WIRE BROWN		20AWG	12"					
22											
23											

NOTES: RESISTORS DELETED ABOVE CAN BE REUSED TO MAKE 4314HL
FOR ASSY DWG SEE 4314-411

SHT 1 OF 1

Valhalla Scientific Inc.	PARTS LIST	CONVERSION P/L 4314A TO 4314JN	MODEL 4314JN	DWG NO 4314-419	REV A

#	REF DES	VALHALLA PART NO	DESCRIPTION	CODE IDENT	MFG PART NO	QTY. I	QTY. N	I	N		REMARKS
		START WITH A COMPLETE 4314A									
		DELETE THE FOLLOWING FROM 4314A									
		04-10529	FRONT PANEL (SCREENED)	VALHALLA	4314-100	1					
	R114	01-20013	RES. 100Ω, 0.05%		J110-100	1					
	R115	01-20004	RES. 900Ω, 0.05%		J110-900	1					
	R116	01-20005	RES. 9K, 0.05%		J110-9K	1					
	R117	01-20006	RES. 90K, 0.05%		J110-90K	1					
		ADD THE FOLLOWING TO 4314A									
			4314JN PREAMP ASSY.	VALHALLA	4314-606	1					
		04-10876	4314JN FRONT PANEL	VALHALLA	4314-114	1					
	R114A, R114B	01-20016	RES. 1K, 0.05%			2					
						2					
		98-04002	#4 INTERNAL STAR WASHER			2					

NOTE: SEE SHT 2 OF 3 FOR ASSY. DWG.

Valhalla Scientific Inc.

WIRE TAB TABLE

DC UNIT

MODEL 4314AB

DRW NO 4314-052 SHT 1 OF 1 REV A

#	FROM	TERMINATION	TO	TERMINATION	AWG	COLOR	LEN	REMARKS
1	MAIN BOARD C20(−)	SOLDER	MAIN BD. E17	SOLDER	22	ORN		THIS JUMPER IS USED ONLY IF TRACE FROM C20 TO R19 HAS BEEN CUT.
2	MAIN BOARD E39	SOLDER	J1-1	SOLDER	22	BLU		
3	RETROFIT BOARD E3	SOLDER	J1-2	SOLDER	22	WHT		
4	RETROFIT BOARD E1	SOLDER	MAIN BD. E31	SOLDER	22	BRN		
5	RETROFIT BOARD E2	SOLDER	R21 CENTER LEAD	SOLDER/SLEEVE	22	RED		
6	RETROFIT BOARD E7	SOLDER	MAIN BD. E37	SOLDER	22	VIO		
7	DISPLAY E1	SOLDER	MAIN BD. E1	SOLDER	22	ORN		
8	DISPLAY E2	SOLDER	MAIN BD E2	SOLDER	22	BLU		
9	MAIN BD E4	SOLDER	MAIN BD E5	SOLDER	22	BLK		
10	MAIN BD. E4	SOLDER	MAIN BD E6	SOLDER	22	BLK		
11	MAIN BD. E4	SOLDER	MAIN BD E7	SOLDER	22	BLK		
12	MAIN BD E22	SOLDER	J1-5	SOLDER	22	RED		
13	MAIN BD E5	SOLDER	J1-4	SOLDER/SLEEVE	14	BUSS		
14	S3-1	SOLDER/SLEEVE	J4-B	SOLDER	22	BRN		
15	S3-2	SOLDER/SLEEVE	MAIN BD. E41	SOLDER	22	RED		
16	S3-3	SOLDER/SLEEVE	MAIN BD. E21	SOLDER	22	ORN		
17	S3-4	SOLDER/SLEEVE	MAIN BD E4	SOLDER	22	YEL		
18	S3-5	SOLDER/SLEEVE	MAIN BD E42	SOLDER	22	GRN		
19	S3-6	SOLDER/SLEEVE	J4-C	SOLDER	22	BLU		
20	J4-A	SOLDER	J4-C	SOLDER	22	BUSS		
21	BATTERIES +	SOLDER	F1-A	SOLDER	22	RED		
22	BATTERIES −	SOLDER	MAIN BD. E11	SOLDER	22	BLK		
23	F1-B	SOLDER/SLEEVE	MAIN BD E40	SOLDER	22	BLU		

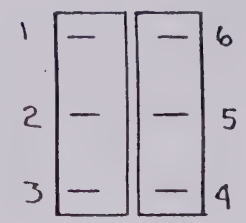

REAR VIEW OF S3

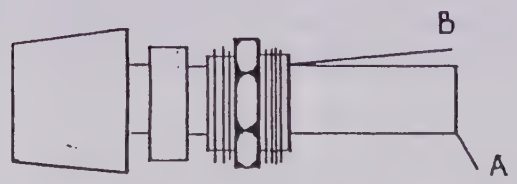

F1 FUSE HOLDER

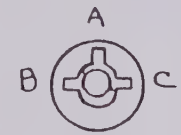

REAR VIEW OF J4

REAR VIEW OF J1

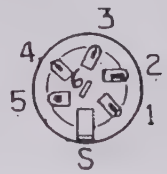

Valhalla Scientific Inc.	PARTS LIST	4314 UK ASSEMBLY DRAWING	MODEL 4314 UK	DWG NO 4314-402	REV A

#	REF DES	VALHALLA PART NO	DESCRIPTION	CODE IDENT	MFG PART NO	QTY. I	QTY. N	I	N		REMARKS
	DELETE FROM 4314-600										
		4-10529	4314A FRONT PANEL		4314-100	1					
	R 24	1-10037	RES. FIXED, 10K, 1 %		RN60C1002B	1					
	ADD TO 4314-600										
	R24	1-10142	4.75KΩ, 1%		RN60C4751F	1					
	R901	1-10037	10KΩ 0.1%		RN60C1002B	1					
	R900	1-01021	100Ω, 5%, 1/4W		RC07GF101J	1					
		4-10587	4314 UK FRONT PANEL		4314-106	1					

NOTE

(ALL 10° THRU 10^{3} OUTPUTS ARE MULTIPLEXED)

4314		50 PIN CONNECTOR (J100)	DATA
IC7	Pin 23	1,6,11,16	1
IC7	Pin 24	2,7,12,17	2
IC7	Pin 1	3,8,13,18	4
IC7	Pin 2	4,9,14,19	8
IC7	Pin 8	29	10° STROBE
IC7	Pin 6	30	10^{1} STROBE
IC7	Pin 9	31	10^{2} STROBE
IC7	Pin 7	32	10^{3} STROBE
IC7	Pin 16	23,22,24,50	GND
R600		5,26,33	+5V

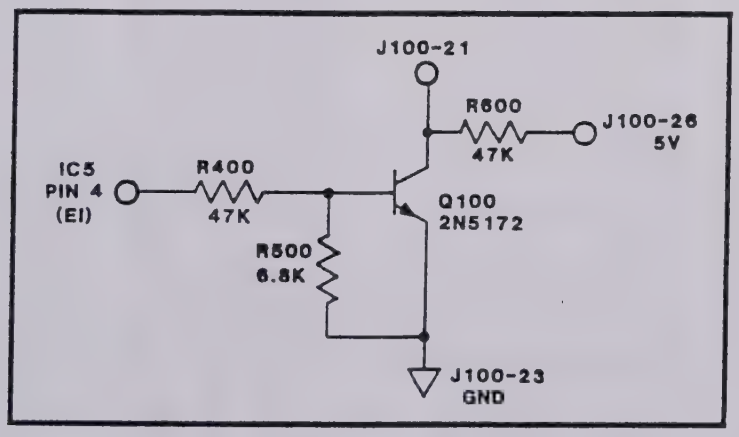

BCD-MX

Valhalla Scientific Inc.	PARTS LIST	MODIFICATION P/L 4314A TO 4314AN	MODEL 4314AN	DWG NO 4314-406	REV B

#	REF DES	VALHALLA PART NO	DESCRIPTION	CODE IDENT	MFG PART NO	QTY. I	QTY. N	I	N		REMARKS
1		START WITH 4314A FINISHED UNIT (VALHALLA) 4314-400				1					
2											
3	DELETE R117	1-20006	90KΩ .05% 5PPM	Goldstar	GS711-90K-.05%-5PPM	1					
4	ADD R117	1-10092	90MΩ 0.1%	Caddock	MG721-90M-0.1%	1					
5											
6	DELETE R116	1-20005	9KΩ .05% 5PPM	Goldstar	GS711-9K-.05%-5PPM	1					
7	ADD R116A	1-10030	9.9MΩ 0.1%	Caddock	1776-35	1					
8	ADD R116	1-20006	90 K 0.05% 5PPM	GOLDSTAR	GS711-90K-05%-5PPM	1					
9	DELETE	4-10529	4314A FRONT PANEL	VALHALLA	4314-100	1					
10	ADD	4-10530	4314AN FRONT PANEL	VALHALLA	4314-101	1					
11	ADD C45	2-70001	CAP. VAR. 2-12 pf	MOUSER	24AA061	1					
12	ADD	80-00022	22AWG BUS WIRE			6"					
13	ADD	70-11022	22AWG SLEEVING			6"					
14	ADD	80-01522	WIRE 22AWG GREEN			4"					

NOTES:

Valhalla Scientific Inc.	PARTS LIST	MODIFICATION P/L 4314A TO 4314BN	MODEL 4314BN	DWG NO 4314-403	REV B

#	REF DES	VALHALLA PART NO	DESCRIPTION	CODE IDENT	MFG PART NO	QTY. I	QTY. N	I	N		REMARKS
1	START WITH 4314A FINISHED UNIT			VALHALLA	4314-400	1					
2											
3	DELETE SHAFTS ON S2A & S2D AND JUMPER SWITCHES										
4	ADD	5-10250	HOLE PLUG .305MD 3/8OD	SMITH	3090 BLACK	2					
5											
6	ADD R118	1-20007	900KΩ .05% 2PPM	Goldstar	GS805-900K-.05%-2PPM	1					
7											
8	DELETE	4-10529	4314A FRONT PANEL	VALHALLA	4314-100	1					
9	ADD	4-10532	4314BN FRONT PANEL	VALHALLA	4314-103	1					
10											

NOTES: SHT. 1 IS THE ASSY. DWG.

Valhalla Scientific Inc.

PARTS LIST

MOD FOR MX

MODEL: 4314 with BCD/MX

DWG NO: 4314-401

REV: A

#	REF DES	VALHALLA PART NO	DESCRIPTION	CODE IDENT	MFG PART NO	I	N	I	N		REMARKS
		F.G.	STD 4314A	53504		1					
	DELETE:										
		4-10236	REAR PANEL	53504	4440-215	1					
	ADD:										
	Q100	3-10003	TRANS.		2N5172	1					
	R400,R600	1-01073	RES 47K ¼W	81349	RC07GF473J	2					
	R500	1-01057	RES 6.8K ¼W	81349	RC07GF682J	1					
	J100	5-10012	CONN BCD 50 PIN F		57-40500	1					
			REAR PANEL MX	53504	4440-218	1					
			SCREW, PHIL PAN CAD		2-56x3/8	2					
			WASHER, STAR		#2	2					
			NUT, HEX		2-56	2					
			WIRE:								
			22 BLK		88"	1					
			22 BUSS		12"	1					

NOTES:

SHT 1 OF 1

Valhalla Scientific Inc.	PARTS LIST	CONVERSION P/L FROM 4314A TO 4314S	MODEL 4314S	DWG NO 4314-414	REV A

#	REF DES	VALHALLA PART NO	DESCRIPTION	CODE IDENT	MFG PART NO	QTY. I	QTY. N	I	N		REMARKS
	DELETE THE FOLLOWING FROM 4314A										
1		4-10529	4314 A FRONT PANEL			1					
2		4-10275	4314A REAR PANEL			1					
3	SW-1	5-03015	TOGGLE 2PDT			1					
4	R114	1-20013	100 0.05% 5PPM/C W.W.		GS711-100-.05%-5PPM	1					
5	R115	1-20004	900 0.05% 5PPM/C W.W.		GS711-900-.05% 5PPM	1					
6	R116	1-20005	9K .05% 5PPM/C W.W.		GS711-9K-.05%-5PPM	1					
7	R117	1-20006	90K 0.05% 5PPM/C W.W.		GS711-90K-.05%-5PPM	1					
8											
9											
	ADD THE FOLLOWING TO 4314A										
10											
11		4-10711	4314 FRONT PANEL		4314-112	1					
12		4-10718	4314UK-2W-SW REAR PANEL		4314-208	1					
13	SW1	5-03062	KEYSWITCH, 2 POLE W/2 KEYS	C + K	Y201-13-0-A1-01-04	1					
14	R114A,B	1-20016	1K.05% 5PPM/C W.W.		GS711-1K-.05%-5PPM	2					
15	R115A,B	1-20005	9K .05% 5PPM/C W.W.		GS711-1K-.05%-5PPM	2					
16			X20 PREAMP BOARD ASSY.		4314-606	1					
17	RV1	1-50051	100K PANEL MOUNT	A-B	SPSG016S104U	1					
18		5-10134	KNOB, BLACK, 10 MM		021-2220	1					
19		5-10135	CAP, RED		040-1030	1					

NOTES:

Valhalla Scientific Inc.	PARTS LIST	CONVERSION P/L FROM 4314A TO 4314S	MODEL 4314S	DWG NO 4314-414	REV A

#	REF DES	VALHALLA PART NO	DESCRIPTION	CODE IDENT	MFG PART NO	QTY. I	QTY. N	I	N		REMARKS
20			SCREW #4 x 1/4 SELFTAP			2					
21		5-10250	HOLE PLUG. 5/16 DIA	SMITH	3090 - BLACK	2					
22			WIRE 22 AWG		YELLOW	12"					
23			WIRE 22 AWG		BLUE	12"					
24			WIRE 22 AWG		BUS	3"					
25											
26			SHRINK TUBING 1/8"			2"					
27											
28											
29											
30											
31											
32											
33											
34											
35											
36											
37											
38											
39											
40											
41											
42											

NOTES:

Valhalla Scientific Inc.	PARTS LIST	MODIFICATION P/L 4314A to 4314AH	MODEL 4314AH	DWG NO 4314-401	REV A

#	REF DES	VALHALLA PART NO	DESCRIPTION	CODE IDENT	MFG PART NO	QTY. I	QTY. N	I	N		REMARKS
1			4314A FINISHED UNIT	VALHALLA	4314-400	1					
2											
3	DELETE	4-10235	REAR PANEL (BATTERY)	VALHALLA	4440-214	1					
4	ADD	4-10576	BLANK PANEL	VALHALLA	4314-203	1					
5											
6	DELETE	5-10018	FUSE HOLDER PANEL MOUNT	LITTLE FUSE	345061	1					
7	DELETE	5-10033	CONNECTOR, JACK	SWITCH-CRAFT	712A	1					
8											
9	DELETE	4-10529	4314A FRONT PANEL	VALHALLA	4314-100	1					
10	ADD	4-10578	4314AH FRONT PANEL	VALHALLA	4314-105	1					MADE FROM 4-10577
11											
12											
13											
14											
15											
16											
17											
18											
19											
20											
21											
22											
23											

NOTES: SHT. 1 IS ASSY DWG.

Valhalla Scientific Inc.

WIRE TAB TABLE

D.C. UNIT

MODEL 4314

DRW NO 4314-051B
SHT 1 OF 1

#	FROM	TERMINATION	TO	TERMINATION	AWG	COLOR	LEN	REMARKS
1	4440-601-2 E1	SOLDER	4314-600 E1	SOLDER	22	ORN	4	
2	4440-601-2 E2	SOLDER	4314-600 E2	SOLDER	22	BLU	2	
3	4314-600 E4	SOLDER	4314-600 E5	SOLDER	22	BLK	7	
4	4314-600 E4	SOLDER	4314-600 E6	SOLDER	22	BLK	2	
5	4314-600 E4	SOLDER	4314-600 E7	SOLDER	22	BLK	5	
6	4314-600 E17	SOLDER	4314-600 E18	SOLDER	22	ORN	6	
7	4314-600 E20	SOLDER	J1 VHI	SOLDER	22	BLU	9	
8	4314-600 E19	SOLDER	J3 VLO	SOLDER	22	WHT	4	
9	4314-600 E22	SOLDER	J2 IHI	SOLDER	22	RED	4	
10	4314-600 E5	SOLDER	J5 ILO	SOLDER	14	BUSS	3	
11	S3-1	SOLDER	J4-B	SOLDER	22	BLK	7	
12	S3-2	SOLDER	C44(+)	SOLDER	22	BLU	12	
13	S3-3	SOLDER	E21	SOLDER	22	BLK	7	
14	S3-4	SOLDER	E4	SOLDER	22	PUR	7	
15	S3-5	SOLDER	C46(-)	SOLDER	22	BLK	12	
16	S3-6	SOLDER	J4-A	SOLDER	22	BLK	7	
17								
18								
19								
20	J4-A	SOLDER	J4-C	SOLDER	22	BUSS	1/4	
21	BATTERIES +	SOLDER	F1-A	SOLDER	22	RED	6	
22	BATTERIES −	SOLDER	E11	SOLDER	22	BLK	7	
23	F1-B	SOLDER	C44 +	SOLDER	22	BLU	4	
24								

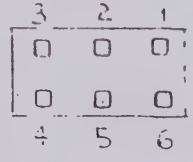

REAR VIEW OF SWITCH S3 (SLEEVE ALL WIRE LEADS)

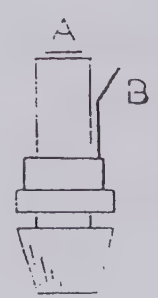

FUSE HOLDER F1

RED RED
VHI (J1) (J2) IHI
OUTPUT SENSE
VLO (J3) (J5) ILO
WHT WHT
FRONT VIEW

Valhalla Scientific Inc.	WIRE TAB TABLE	DC UNIT	MODEL 4314	DRW NO 4314-051 SHT 1 OF 1	REV C

#	FROM	TERMINATION	TO	TERMINATION	AWG	COLOR	LEN	REMARKS
1	MAIN BOARD C20(−)	SOLDER	MAIN BD. E17	SOLDER	22	ORN		THIS JUMPER IS USED ONLY IF TRACE FROM C20 TO R19 HAS BEEN CUT.
2	MAIN BOARD E39	SOLDER	J1 VHI	SOLDER	22	BLU		
3	RETROFIT BOARD E3	SOLDER	J3 VLO	SOLDER	22	WHT		
4	RETROFIT BOARD E1	SOLDER	MAIN BD. E31	SOLDER	22	BRN		
5	RETROFIT BOARD E2	SOLDER	R21 CENTER LEAD	SOLDER/SLEEVE	22	RED		
6	RETROFIT BOARD E7	SOLDER	MAIN BD. E37	SOLDER	22	VIO		
7	DISPLAY E1	SOLDER	MAIN BD. E1	SOLDER	22	ORN		
8	DISPLAY E2	SOLDER	MAIN BD E2	SOLDER	22	BLU		
9	MAIN BD E4	SOLDER	MAIN BD E5	SOLDER	22	BLK		
10	MAIN BD. E4	SOLDER	MAIN BD E6	SOLDER	22	BLK		
11	MAIN BD. E4	SOLDER	MAIN BD E7	SOLDER	22	BLK		
12	MAIN BD E22	SOLDER	J2 I HI	SOLDER	22	RED		
13	MAIN BD E5	SOLDER	J5 I LO	SOLDER	14	BUSS		
14	S3-1	SOLDER/SLEEVE	J4-B	SOLDER	22	BRN		
15	S3-2	SOLDER/SLEEVE	MAIN BD. E41	SOLDER	22	RED		
16	S3-3	SOLDER/SLEEVE	MAIN BD. E21	SOLDER	22	ORN		
17	S3-4	SOLDER/SLEEVE	MAIN BD E4	SOLDER	22	YEL		
18	S3-5	SOLDER/SLEEVE	MAIN BD E42	SOLDER	22	GRN		
19	S3-6	SOLDER/SLEEVE	J4-C	SOLDER	22	BLU		
20	J4-A	SOLDER	J4-C	SOLDER	22	BUSS		
21	BATTERIES +	SOLDER	F1-A	SOLDER	22	RED		
22	BATTERIES −	SOLDER	MAIN BD. E11	SOLDER	22	BLK		
23	F1-B	SOLDER/SLEEVE	MAIN BD E40	SOLDER	22	BLU		

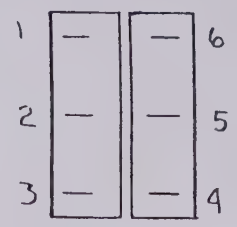

REAR VIEW OF S3

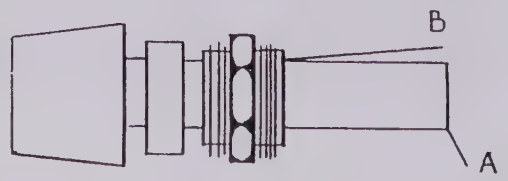

F1 FUSE HOLDER

REAR VIEW OF J4

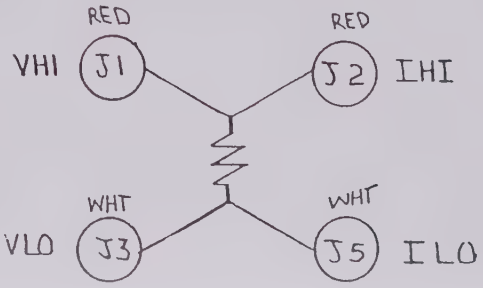

FRONT VIEW OF BINDING POST

APPENDIX II SCHEMATICS

The following schematic drawings are included in this manual:

Drawing Number	Description	Pages
4314-070	Model 4314A	1
4314-600	4314A Assembly	1

REVISIONS					
ZONE	LTR	DESCRIPTION		DATE	APPROVED
616	K	ADDED R121 + Q17	DPM	3-27-85	JCM
1064	L	CHANGED JUMPER ON SWITCH	DGL	11/23/87	CRL
1159	M	ADDED RETROFIT BOARD	CRL	9-26-88	JCM
1357	N	ADDED CR31	PEL	12-7-89	PEL

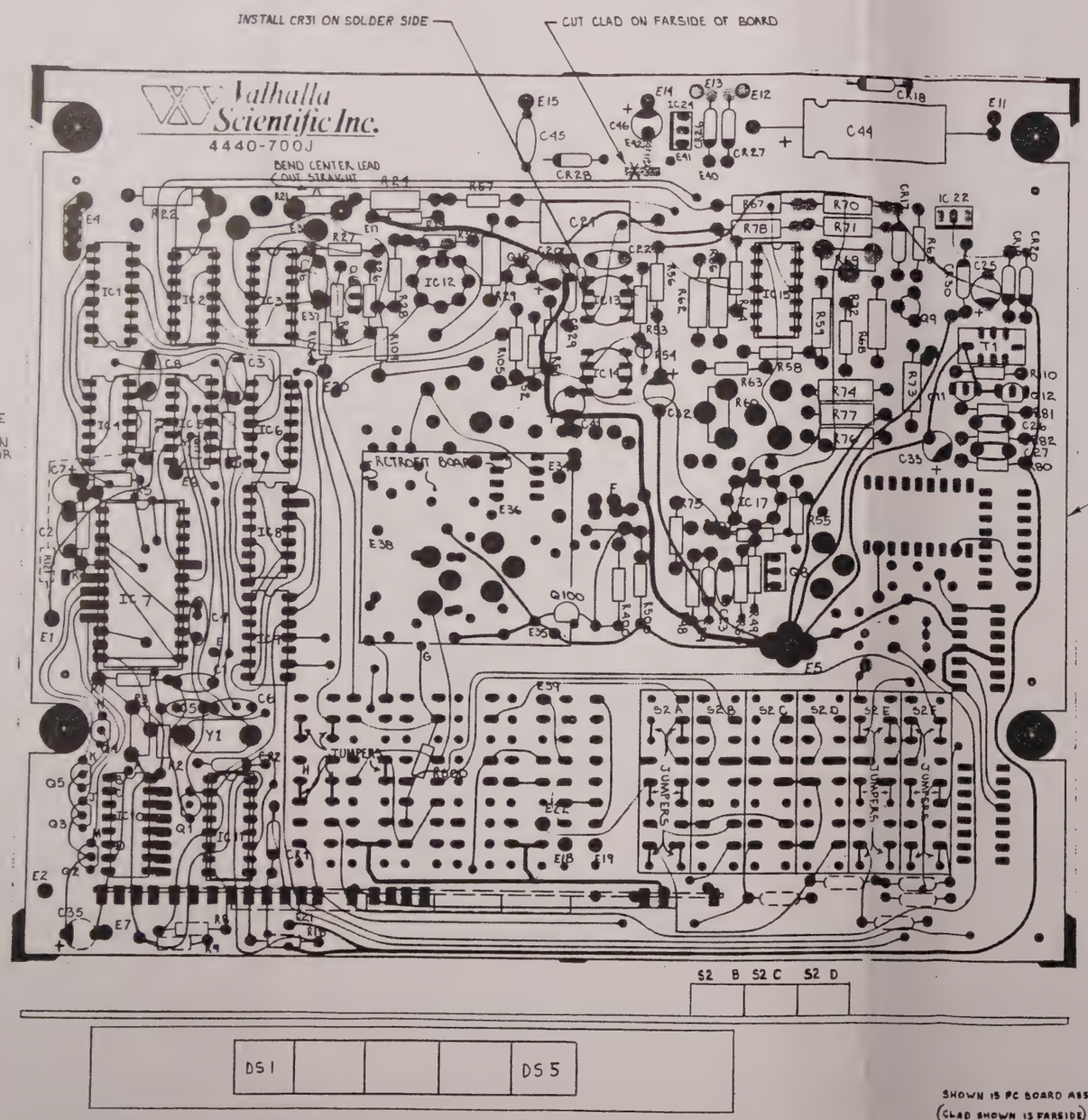

NOTE:
Q17 AND R121 MOUNT ON THE FARSIDE OF THE BOARD.
MOUNT R121 BETWEEN E1 AND THE COLLECTOR OF Q17. THE EMITTER OF Q17 CONNECTS TO E6. THE BASE OF Q17 CONNECTS TO PIN 4 OF IC5.
SLEEVE ALL LEADS.

NOTE:
Q100, R400, R500, R600 ARE USED IN BCD-MX ONLY

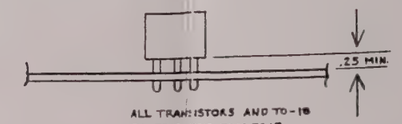

ALL TRANSISTORS AND TO-18
Q1, IC12, IC13, IC14, IC17,

P.C.B. 4440-700J

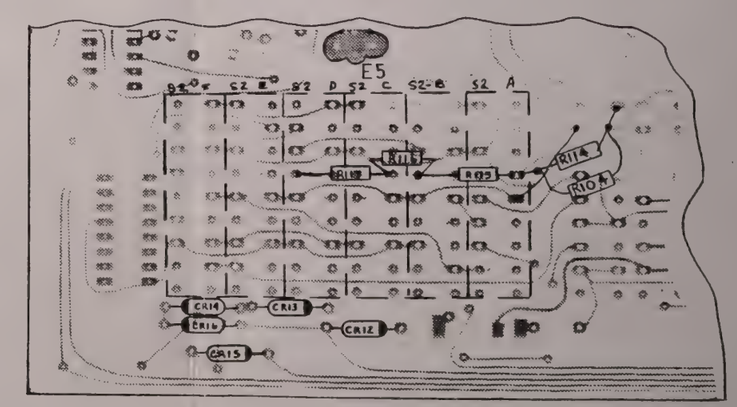

VIEW FROM BOTTOM OF P.C.B.
(CLAD SHOWN IS NEARSIDE)

SHOWN IS PC BOARD ASSEMBLY 4314B-700
(CLAD SHOWN IS FARSIDE)

NOTES:
5. USE PARTS LIST 4314-400.
4. USE P.C. BOARD 4440-700
3. FOR ASSEMBLY DIAGRAM SEE 4440-400
2. FOR WIRE TAB TABLE SEE 4314-051
1. FOR SCHEMATIC SEE 4314-070

MATERIAL	DRAWN MC 4/82	Valhalla Scientific Inc. SAN DIEGO, CALIFORNIA	
	CHECKED RM 4/82		
	APPR. JCM 4/85		
FINISH		4314A ASSEMBLY	
	SCALE NONE	CODE IDENT NO. 83504	SIZE D / DRAWING NO. 4314-600 / REV N
	SHEET 1 OF 1		

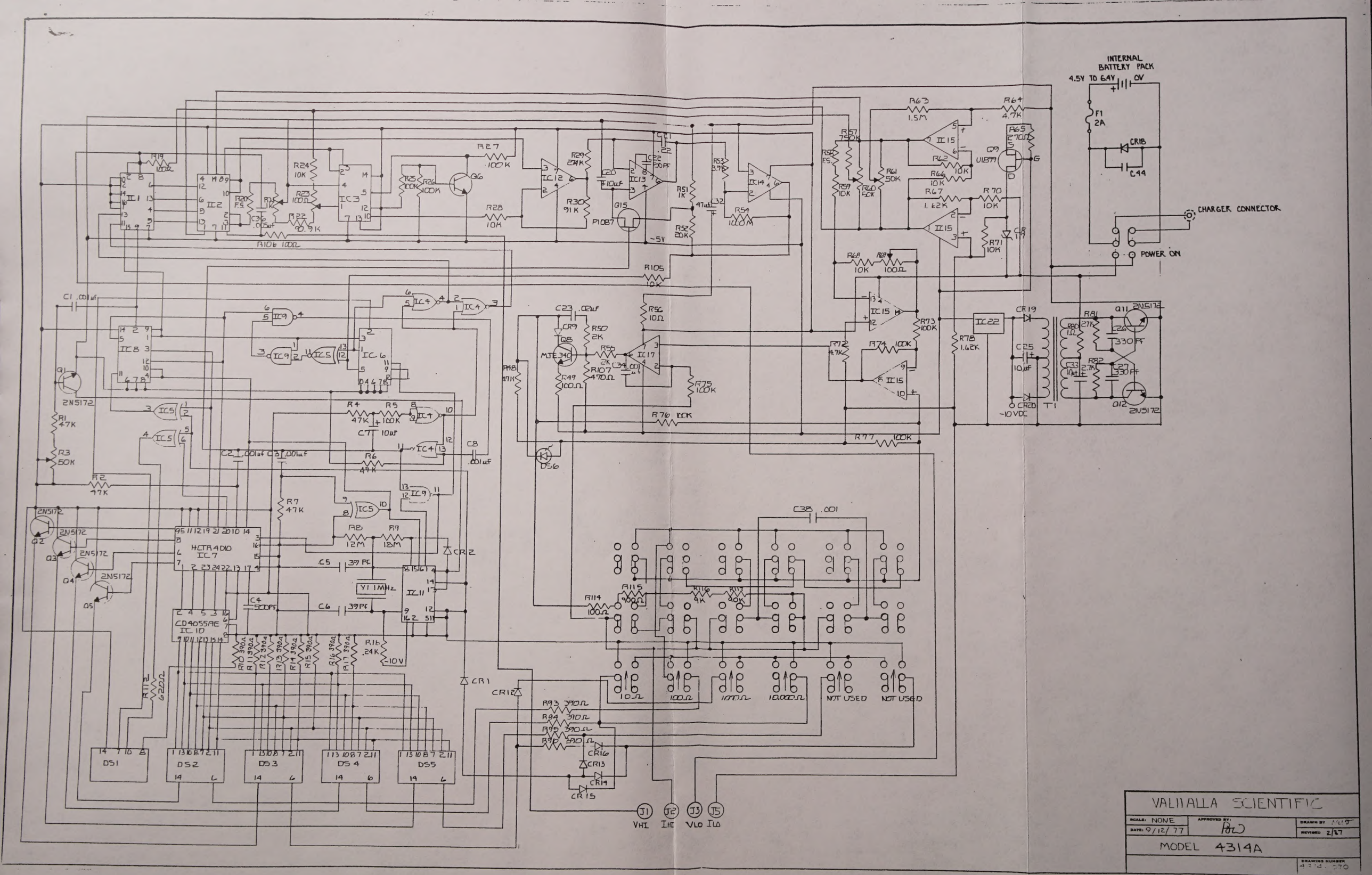
INTERNAL BATTERY PACK
4.5V TO 6.4V
0V
F1 2A
CR18
C44
CHARGER CONNECTOR
POWER ON
IC1
IC2
IC3
IC4
IC5
IC6
IC7
IC8
IC9
IC11
IC12
IC13
IC14
IC15
IC17
IC22
HCTR4010 IC7
CD4055AE IC10
Y1 1MHz
Q1 2N5172
Q2 2N5172
Q3 2N5172
Q4 2N5172
Q5 2N5172
Q6
Q8 MJE340
Q9 U1899
Q11 2N5172
Q12 2N5172
Q15 P1087
-5V
-10V
-10VDC
T1
10Ω
100Ω
1000Ω
10,000Ω
NOT USED
NOT USED
DS1
DS2
DS3
DS4
DS5
DS6
J1 VHI
J2 IHI
J3 VLO
J5 ILO
VALHALLA SCIENTIFIC
SCALE: NONE
DATE: 9/12/77
APPROVED BY:
DRAWN BY
REVISED 2/87
MODEL 4314A
DRAWING NUMBER